UNOX®

Instruction manual

ENGLISH

XVC-XBC

BakerTop 596622 - 596632 - 596642

ChefTop 596505 - 596510 - 596511 - 596512
596522 - 596523 - 596523 - 596525
596532 - 596535
596542 - 596543 - 596548

EMGA

INTRODUCTION 3
FORWARD 4
PICTOGRAM DESCRIPTION 4
SAFETY REGULATIONS 5

INSTRUCTIONS FOR THE INSTALLER 8

INSTRUCTIONS FOR THE USER 44

The company reserves the right to apply improvement modifications to appliances and accessories at any time without advance notice.

INTRODUCTION

Dear Customer,
We thank you for having purchased an oven / complementary accessory from the ChefTop™/BakerTop™ line.

ChefTop™/BakerTop™ ovens are the climax of Unox research and guarantee minimum occupation of space with superlative performance while offering outstanding cooking management at any condition of use and load.
ChefTop™/BakerTop™ ovens employ the finest UNOX patented technology, result of collaborations with master chefs and the world's leading research institutions.
A wide array of available accessories make these ovens extremely versatile, and streamline kitchen duties.
ChefTop™/BakerTop™ ovens are available in both electric and gas models.
We recommend you thoroughly read this manual for all instructions on how to maintain the aesthetic and functional qualities of your purchased product intact.

UNOX S.p.A.

Dealer:

Installer:

Installation date:

Forward

This manual shows the installation and use of the ChefTop™ e BakerTop™ line of ovens.

ChefTop™ ovens and their accessories allow complete COOKING SOLUTIONS using MAXI.Link technology dedicated to superb cuisine, such as: oven plus blast-chiller, oven plus SlowTop temperature maintainer and combination of two or more ovens.
The ChefTop™ line of ovens come in gas and electric models, have digital control and capacities of: 3, 5 GN 2/3; 3, 5, 7, 10, 20 GN 1/1; 6, 10, 20 GN 2/1.
ChefTop™ electric ovens also include the POWER and ECO versions that allow the chef to choose between maximum power or energy savings in relation to how the oven is used.

BakerTop™, along with their accessories, make it possible to create BAKING STATIONS for the production of pastry and baked goods. BakerTop™ ovens make it possible to cook: puff pastry, sponge cakes, biscuits, choux pastry, croissants, pizza, focaccia bread, panettone cakes and leavened goods. The BakerTop™ line of ovens come in gas and electric models, have digital control and load capacities of: 4, 6, 10, 16 trays 600x400.

Explanation of pictograms

Danger! Situation presenting immediate danger, or a hazardous situation which could cause injury or death.

Danger: fire hazard!

Danger: electric shock!

Danger: risk of burns

Consult other chapter

Tips and useful information

The installation and user instructions are valid for all models unless otherwise specified by the following pictograms:

Instructions valid only for GAS ovens

Instructions valid only for countertop ovens

Instructions valid only for free-standing ovens

Instructions valid only for free-standing trolley ovens

Safety regulations

Safety regulations for installation and maintenance

- **Read this guide carefully before installing and maintaining the appliance, and conserve this guide with care for any future consultation of users.**
- **All installation, assembly and non-routine maintenance operation must be performed exclusively by qualified technicians that are authorized by UNOX, in compliance with the regulations in force in the user country, with respect to the regulations on systems and work safety.**
- Disconnect the oven from its electrical and gas supplies before installation or maintenance (ONLY FOR GAS OVENS).
- Check that systems are compliant to the installation country standards and to the specifications indicated on the appliance rating plate before installing the appliance.
- Interventions, tampering or modifications not expressly authorized that do not comply with the indications in this manual shall invalidate the guarantee.
- Installation or maintenance that fails to respect the indications in this manual may cause damage, injury or fatal accidents.
- Persons not involved with appliance installation may not pass through or occupy the work area during appliance assembly.
- If the equipment is installed on wheel bases or stacked in columns, be sure to use only UNOX components and respect the instructions on their packaging.
- Given its potential danger, the package material must be kept out of reach of children or animals, and properly disposed of as called for by local regulation.
- The ratings plate provides essential technical information that is of utmost importance for any appliance maintenance or repairs. Do not remove, damage or modify the plate.
- Failure to follow these regulations may cause damage and (fatal) injury, invalidates the guarantee and relieves UNOX of all liability.

ONLY FOR GAS OVENS

- **Appliances must be installed in areas:**
  - that comply to the safety requirements called for by the standards in force;
  - that have adequate ventilation. Make sure that air is continually refreshed from the outside to ensure correct combustion and to avoid the formation of volatile substances hazardous to health - risk of suffocation!
- **Make sure:**
  - that installation is performed by respecting the safety regulations of the country of use and of the gas company;
  - that the ventilation inlets and the appliance exhausts are not obstructed (e.g. objects and walls);
  - that the type of gas available corresponds to the type indicated on the appliance;
  - that the gas pipe diameters meet the required measurements;
  - that components - not supplied by UNOX - used for installation comply with the regulations in force of the country of use;
  - that the connection pipe pressure equals that of the gas supply inlet;
  - that maximum gas piping inlet pressure is 60 mbar; pressures may not exceed this threshold.
- **After connection to the gas supply, check for perfect airtightness of the components by preferably using non-corrosive foams. Never use flames!**

- At appliance commissioning, test burner exhaust gases, steam and hot air (CO, CO^2) recording the registered values on the appliance. The burner settings must be checked and adjusted by a specialised technician for values of non-diluted CO greater than 1000 ppm.

Safety regulations for use

- **Read this guide carefully before using the appliance and performing routine maintenance, and conserve this guide with care for any future consultation of users.**
- **Following procedures other than those indicated in this guide to use and clean the appliances is considered inappropriate and may cause damage, injury or fatal accidents; in addition to invalidating the guarantee and relieving UNOX of all liability.**
- This appliance can only be used for cooking food by qualified installer in industrial and professional kitchens upon completion of scheduled training courses; all other uses are not compliant to the scope of use and therefore hazardous.
  In particular, the appliance can be used for:
  - cooking Pastry and Bread goods, whether fresh or frozen (**BakerTop™**);
  - cooking of Gastronomic products, whether fresh or frozen (**ChefTop™**);
  - steam cooking meat, fish and vegetables (**ChefTop™**);
  - cooking vacuum-packed food in bags which are suited to that type of cooking procedure;
  - bringing chilled and frozen food back to normal temperature (**BakerTop™ - ChefTop™**);
- Monitor the appliance during its entire operation cycle.
- If the appliance does not function or if there are any functional or structural alterations, disconnect the electricity, water and gas supplies (ONLY FOR GAS OVENS) and contact a UNOX authorized customer assistance service. Do not attempt to independently repair the appliance. Request UNOX original spare parts for any repairs necessary.
  Failure to observe these regulations may cause damage and (fatal) injuries, and also invalidates the guarantee.
- To ensure that the appliance is in perfect use and safety conditions, maintenance and inspections should be performed yearly by an authorised customer assistance service.

RISK OF BURNS and INJURY!

- While cooking and during cooling of all appliance parts, be careful to:
  - Only touch the appliance control components or handle because the external parts are extremely hot (temperature above 60°C - 140°F).
  - If it is necessary to open the door, perform this operation slowly and with utmost caution while careful of extremely hot exhaust steam released from the oven cavity.
  - Wear heat resistant clothing appropriate to the use at hand to move containers, accessories and other objects inside the oven cavity.
  - Be extremely careful when removing trays from the oven cavity.

  ONLY FOR FREE-STANDING TROLLEY OVENS:
  - lock the front wheel brakes into place after putting loads into the oven cavity and each time these are not to be moved;
  - always lock the trays into their guides;
  - **be extremely careful when moving** because the trays may contain boiling fluids that may spill or the trolleys may capsize (for example if moved across uneven floors or through doors).

- Extract the probe from the core of foods before removing trays from the oven and place it in the external probe holder. Before extracting the tray check that the probe cable is not in the way. Handle the probe with care because it is extremely sharp and, after use, reaches high temperatures.
- During "COOL" mode (oven cavity cooling) the appliance also functions while the door is open.
  Do not remove or touch the protective fan casing, the fans and the heating elements while the appliance is on and until complete cooling.
- Do not open the oven door during cleaning in order to avoid risks of injuries caused by impeller movement, hot steam and aggressive action of chemical detergents used.

RISK OF FIRE!

- Before using the appliance make sure that no non-compliant object (instruction manual, plastic bags or other) or detergent residue is not inside the oven cavity; likewise, make sure that the smoke exhaust is free of obstructions and that no flammable materials are in its vicinity.
- **Do not place sources of heat (i.e. grills, fryers, etc.), highly flammable substances or fuels in the vicinity of the appliance (i.e. gasoline, petrol, bottles of alcohol, etc...).**
- Do not use highly flammable food or liquids while cooking (ex. alcohol).
- Always keep the oven cavity clean, performing daily cleaning or after each cooking session: fats or food residue left inside the appliance could ignite!

RISK OR ELECTRICAL SHOCK

- Do not open the compartments marked with these symbols: access is reserved to qualified installer authorised by UNOX.
  Failure to observe this regulation invalidates the guarantee and may cause damage and (fatal) injuries.

ONLY FOR GAS OVENS

- **Always maintain the smoke exhaust pipe free of obstructions (e.g. objects, trays, etc...) that is located on the top portion of the oven.**
- Always switch-on the hood when using the appliance if installed.
- If the appliance is connected to a smoke flue, this must be:
  - kept free of any obstructions - risk of fire!
  - regularly cleaned and inspected as called for by the relative standards of the country of use - risk of fire!
- The appliance must be installed far from air currents or drafts - risk of fire!
- **Make sure that ventilation inlets and the underlying part of the appliance are clean and free of obstructions (e.g. objects near the appliance).**
- If the odour of gas is detected:
  - immediately cut-off the gas supply;
  - immediately air out the area;
  - **do not engage any electrical switch or provoke sparks or flames;**
  - use an **external** telephone to contact the gas utility company.

INSTRUCTIONS FOR THE INSTALLER

Contents

Unpacking 9
Removing the protective film and silicone cap 12
Checking pack contents 12
Getting started 14
Positioning 15
Characteristics of installation area 15
Appliance distances 17
Positioning - COUNTERTOP OVENS 18
- Positioning: Floor or wheeled-bases 18
- Positioning: substructures 19
- Anchoring on user's substructure (i.e. steel tables, etc...) 19
- Anchoring to UNOX substructures 19
- Positioning: appliance stacking (Maxi.LINK) 21

Positioning - FREE-STANDING OVENS WITH/WITHOUT TROLLEY 22
- Levelling the appliance 22

Adjustments 24
Door closure adjustment 24
Electrical connection 26
- Checks 27
- Adapting to different voltages 27
- Replacing the power supply cable 27

Gas connection 28
- Connecting to the gas utility system 28
- Adapting to different gas supplies 28
- Post-connection checks 31

Plumbing 32
- Plumbing: water supply 32
- Water supply: specifications 33
- Plumbing: water drainage 34
- Drainage: specifications 35
- Plumbing: interventions 35

Smoke exhaust - ELECTRIC OVENS 38
Smoke and gas exhaust - GAS OVENS 39
Connecting stacked appliances (MAXI.Link) 40
- Connecting appliance with RJ45 cable 40
- Setting ovens as “MASTER” or “CONTROLLED” 40
- Connecting the external USB interface kit and safety thermostat reset 42

Before installing the appliance carefully read chapter "*Safety regulations*" at page *5* and chapter *"Forward"* at page *4*.
During installation, wear proper protective clothing (protective footwear, gloves, etc.).

Unpacking

Check the package at reception for any visible damage. If damage is found, promptly contact UNOX and DO NOT install the appliance.

Before transporting the appliance to its installation point, make sure that:
- it easily passes through doorways;
- the floor supports its weight.

Transport must be exclusively performed by mechanical means (i.e. transpallet lifter).

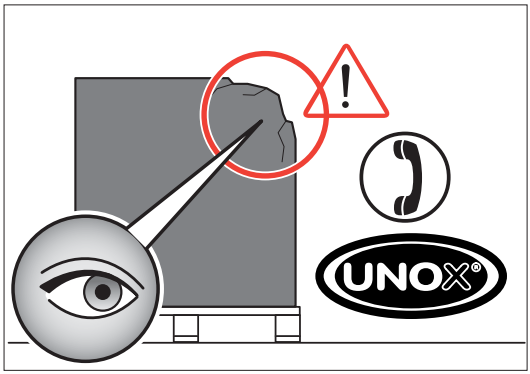

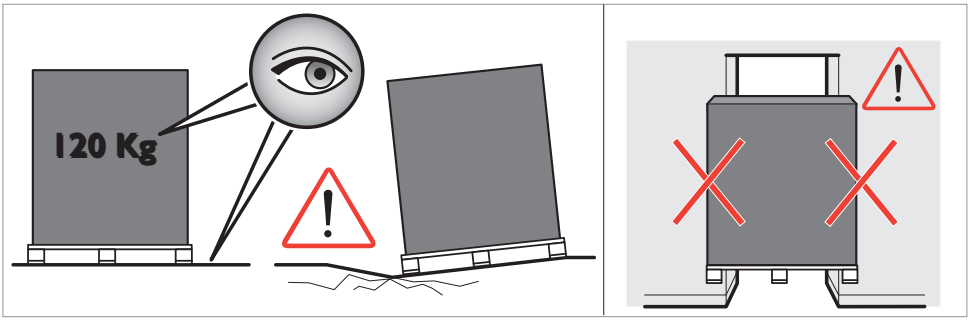

Follow the instructions in the figure and conserve several screws and plastic supports for the next installation; the screws that fasten the plastic supports to the wooden pallet can be disposed of.

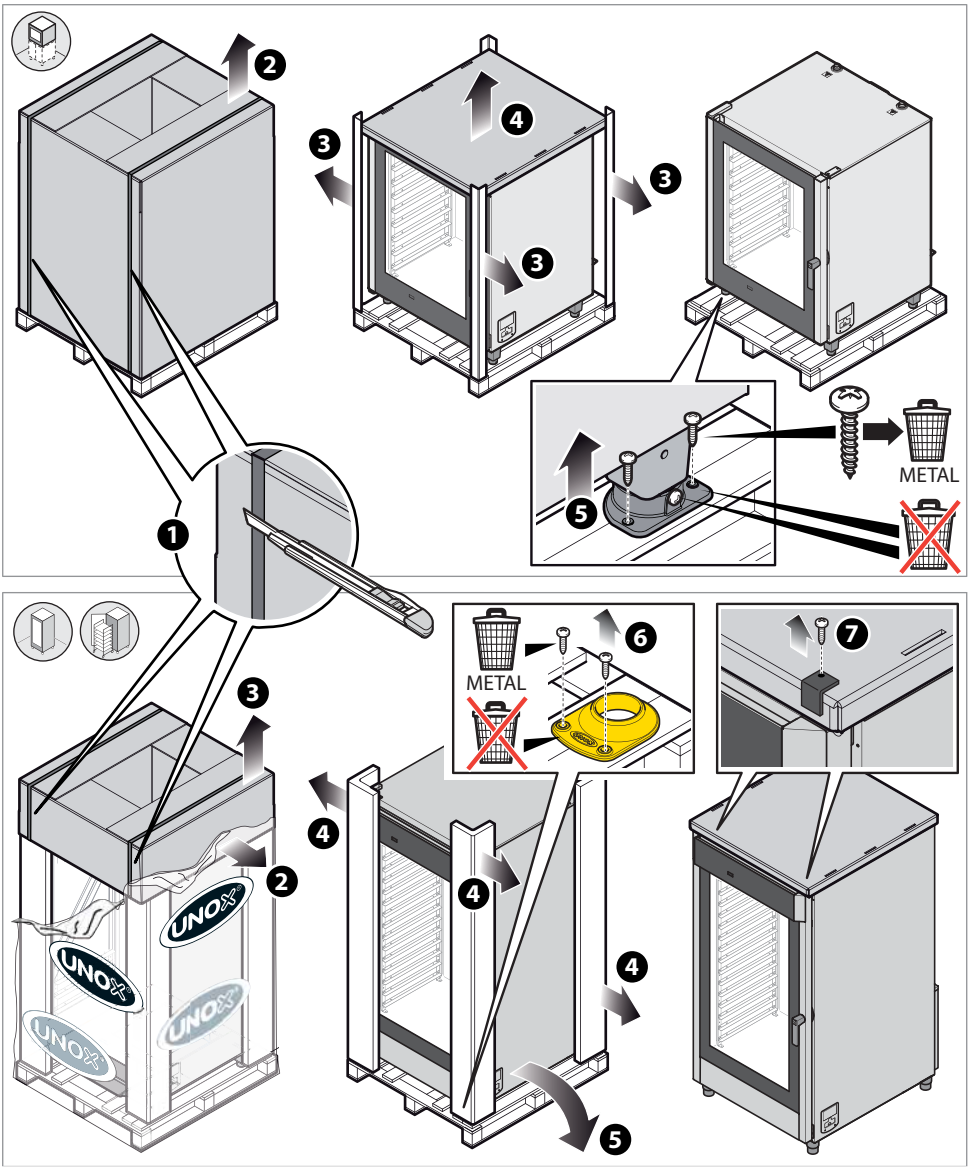

The packaging materials, given their potential danger, must be kept out of reach of children and animals, and correctly disposed of in compliance with local regulations.

UNOX has followed the NON-STEP Efforts philosophy for years to increase the environmental computability of its products to reduce energy consumption and wastes.
UNOX wishes to protect the environment and invites the consumer to dispose of waste in recycling bins.

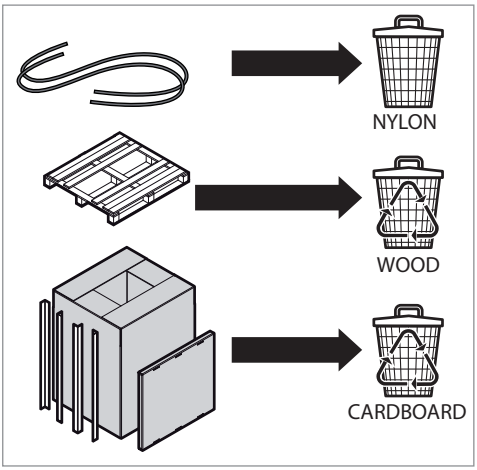

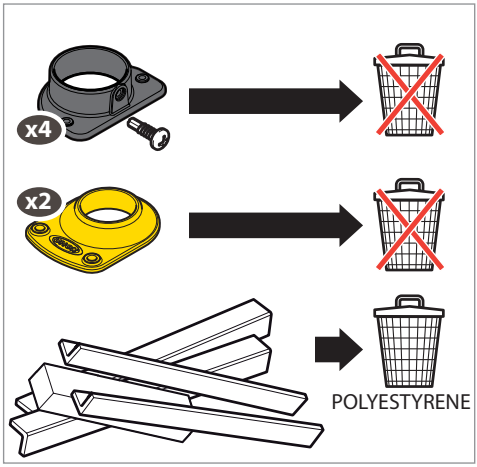

Removing the protective film and silicone cap

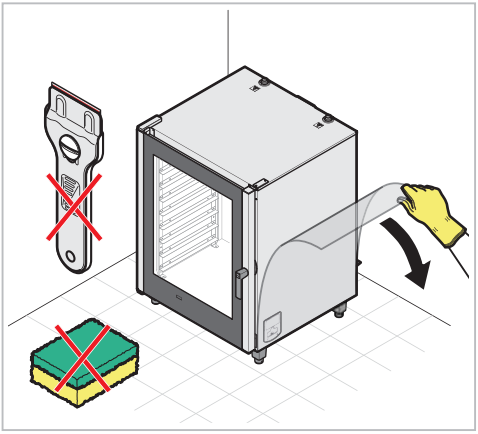

Slowly detach the protective films from the appliance: clean any glue residue with appropriate solvents without using tools, abrasive detergents or acids that could ruin the surfaces.

The removed film, given its potential danger, must be kept out of reach of children and animals; and correctly disposed of in compliance with local regulations.

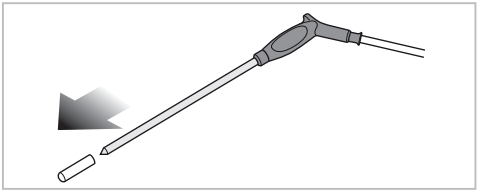

Checking package contents

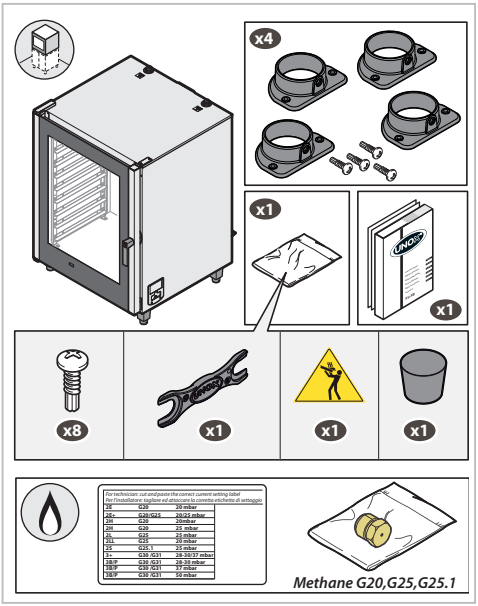

Before installing the appliance, check that the following packaged components are present and free of damage:

COUNTERTOP OVENS

- oven with rear side ready for:
  - electrical connections (power supply cable already assembled);
  - plumbing (water supply pipe, mechanical filter, 3/4 fitting with non-return valve already assembled);
  - LPG gas connection (ONLY FOR GAS OVENS)
- technical documents (use and installation manual, "technical specifications" sheet);
- 4 plastic supports;
- 1 “Starter Kit” bag (8 self-tapping screws, 1 attachment wrench, 1 falling liquid warning sticker, 1 conical exhaust plug).
- methane nozzle and settings sticker (ONLY FOR GAS OVENS)

FREE-STANDING OVENS WITHOUT TROLLEY

- oven with rear side ready for:
  - electrical connections (power supply cable already assembled);
  - plumbing (water supply tube, mechanical filter, 3/4 attachment with non-return valve already assembled);
  - LPG gas connection (ONLY FOR GAS OVENS)
- tray-holder trolleys (only models: XBC1005E - XVC 4005EP - XVC 1005EP);
- technical documents (use and installation manual, "technical specifications" sheet);
- 2 plastic floor supports;
- 1 “Starter Kit” bag (1 attachment wrench, 1 falling liquid warning sticker, 1 conical exhaust plug).
- 2 methane nozzle and settings sticker (ONLY FOR GAS OVENS)

Contact UNOX if any pieces are missing.

Different auxiliary instruments are available as professional completion of the BakerTop™ and ChefTop™ ranges: contact UNOX for additional information.

FREE-STANDING TROLLEY OVENS

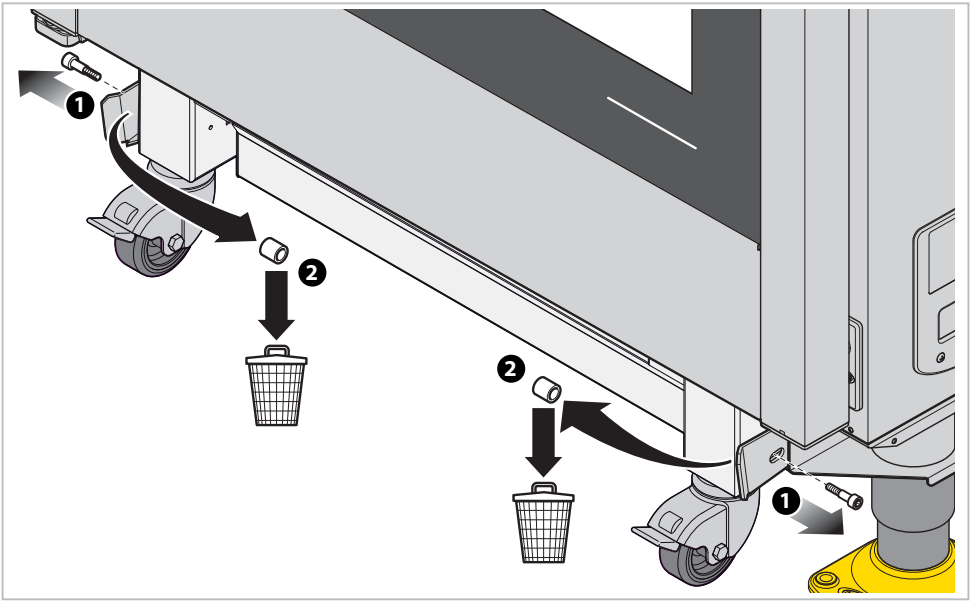

Positioning

Characteristics of the installation area

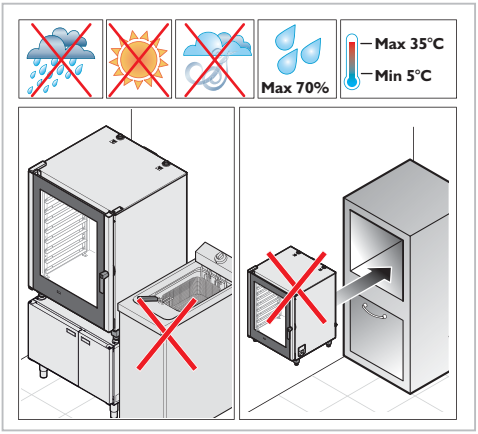

Install the appliance in areas:
- dedicated and conform to cooking industrial foods;
- having adequate air ventilation;
- that comply with the laws in effect on system and work safety;
- protected against atmospheric agents;
- with temperatures between +5° to +40°C maximum;
- having a maximum humidity of 70%.

The law requires gas appliances to be installed in areas:
- with surface area and ventilation suitable for oven power;
- with outdoor evacuation of exhaust gas.

For additional information consult chapter ***Smoke and gas exhaust*** at page ***39***.

Do not install the appliance near others that reach high temperatures in order to avoid damaging electric parts.
The appliance cannot be recess installed.
Make sure that the floor supports the weight of the appliance at full capacity (see "*Table A*" and "*Table B*").

For additional technical information on the appliance, consult the "technical specifications" sheet attached to the appliance.

Table A

MODELS BakerTop™	Size mm	Weight* kg
XBC 1005E - EL	866x972x1866	177
XBC 905E - EL	866x972x1866	183
XBC 805E	860x882x1217	121
XBC 605E	860x882x897	89
XBC 405E	860x882x709	63
XBC 1015GE-EGL	866x970x2072	200
XBC 915EG - EGL	866x970x2072	206
XBC 815EG	860x882x1425	135
XBC 615EG	860x882x1105	109

Table B

MODELS ChefTop™	Size mm	Weight* kg	MODELS ChefTop™	Size mm	Weight* kg
XVC 4005EP -EPL	869x1206x1857	190	XVC 105E	750x782x498	45
XVC 2005EP	860x1135x1217	165	XVC 105EP	750x782x498	45
XVC 1205EP	860x1135x897	150	XVC 205E	574x773x632	44
XVC 1005EP - EPL	866x972x1866	177	XVC 055E	574x762x498	38
XVC 905EP - EPL	866x972x1866	183	XVC 4015EG - GL	869X1206X2072	220
XVC 705E	750x773x1042	86	XVC 1215EG	860x1135x1105	170
XVC 705EP	750x773x1042	86	XVC 1015EG - EGL	866X972X1866	200
XVC 505E	750x773x895	79	XVC 915EG - EGL	866X972X1866	206
XVC 505EP	750x773x895	79	XVC 715EG	750x773x1254	100
XVC 305EP	750x773x707	62	XVC 515EG	750x773x1107	93
XVC 305P	750x773x707	62	XVC 315EG	750x773x918	76

*** the values refer to the appliance when empty**

The installation areas must be equipped with electrical, plumbing and gas utilities (only for gas ovens) that comply with the regulations on system and work safety of the country of use.

The figure gives indicative connection measurements:

- electrical connection
- plumbing
- connection to the gas supply (only for gas models)
- exhaust (**S**)
- floor exhaust (**SP**)

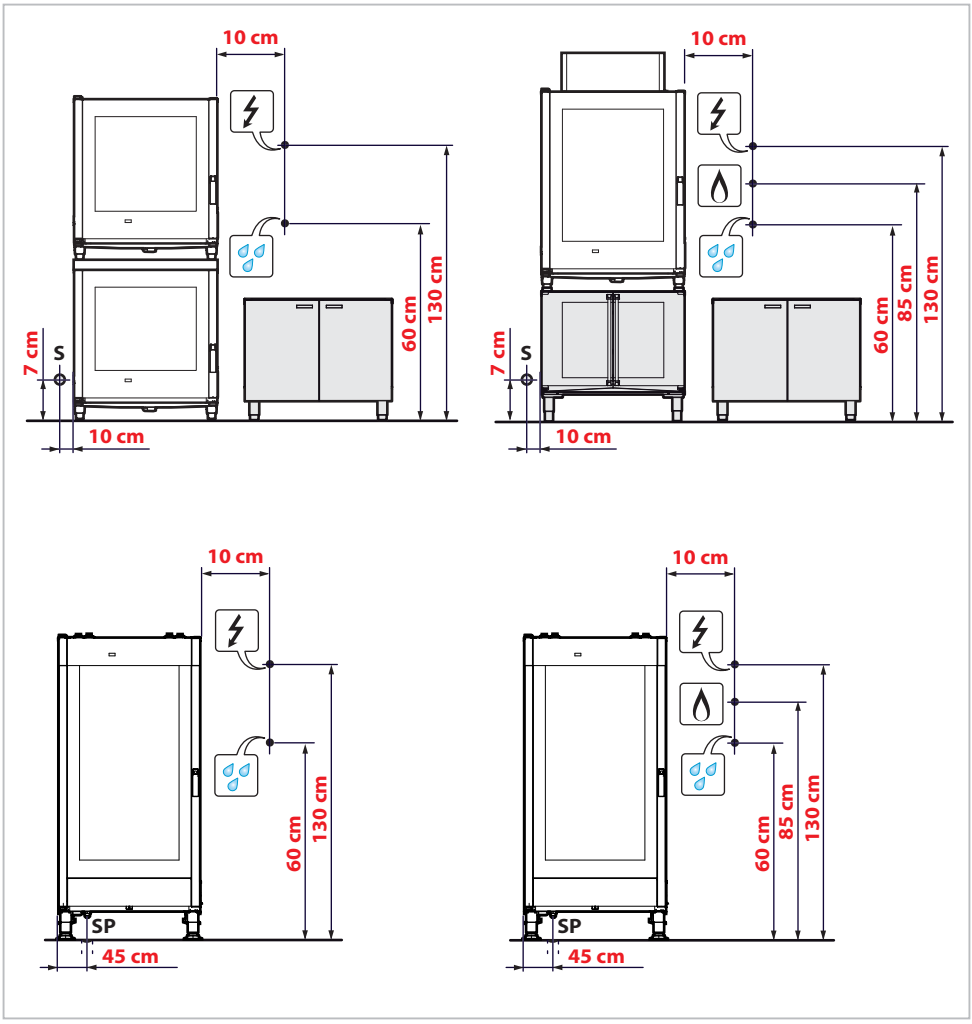

Appliance distances

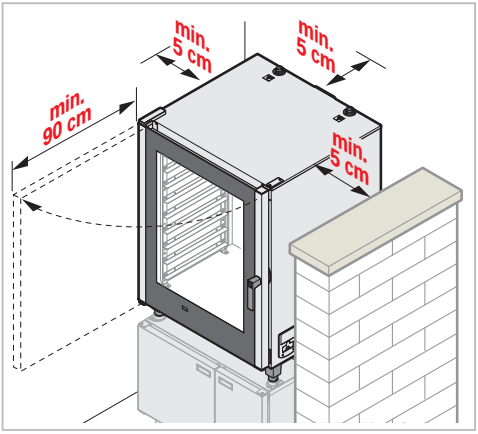

Position the appliance respecting the distances in the figure and so that the back wall is easily accessible for appliance connections and maintenance.

Do not install the appliance near easily inflammable or heat sensitive materials, walls or furniture. Otherwise, protect them with appropriate non-inflammable materials in compliance with fire prevention regulations.

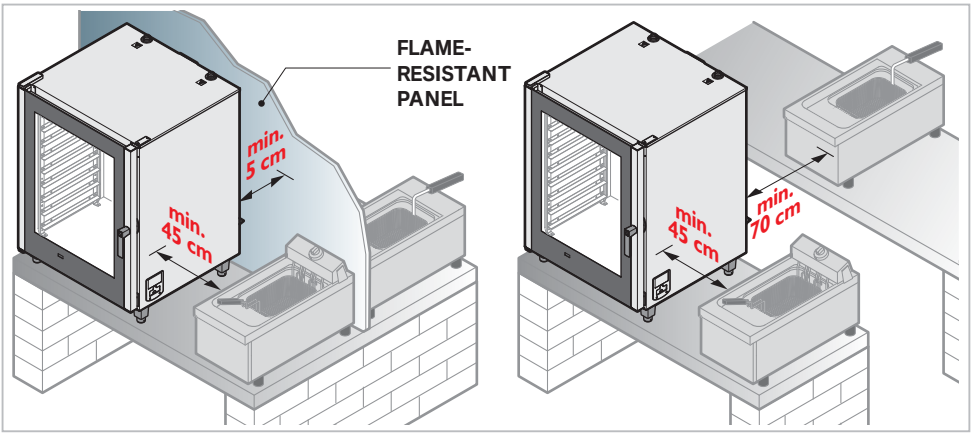

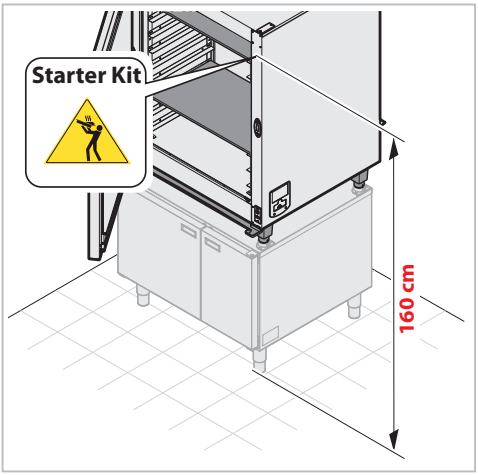

For safety reasons, the last tray should NEVER be placed at a height greater than 160 cm.
If necessary to do so, **it is mandatory to post the sticker contained in the "Starter Kit" at the height shown in the figure.**

Positioning - COUNTERTOP OVENS

The countertop ovens can be positioned:
- on the floor;
- on wheels;
- on own or UNOX substructures;
- stacked on other UNOX appliances (Maxi.LINK).

Floor or wheeled-base positioning

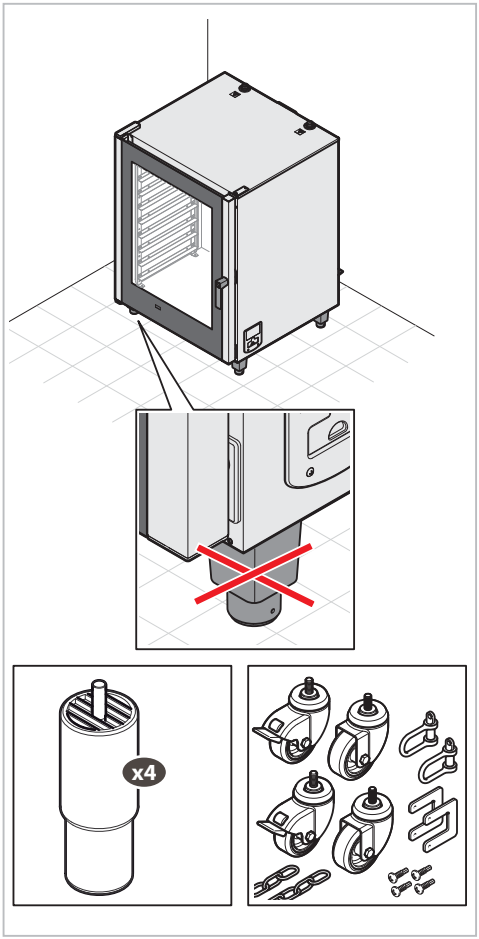

The floor beneath the appliances must:
- be flame and heat resistant;
- be perfectly level;
- have a flat and even surface;
- able to support the appliance weight at full load without undergoing deformation or structural failure.

Positioning: free-standing

DO NOT position the appliances on the floor directly but remove the plastic feet from the appliance and assemble the steel support feet H.140 mm. UNOX. For detailed information on assembling the support feet Kit read the instructions on the kit packaging.

Positioning: wheel bases

Move the appliance using only the UNOX wheel kit and by following the instructions contained on the kit packaging.

Positioning: substructures

Before anchoring on a UNOX substructure or on one of your own, always check that the substructure is perfectly flat using a spirit or digital level. If otherwise, the UNOX substructure can be levelled by acting on the feet, making sure to avoid completely unscrewing them.

Anchoring on user's substructure (i.e. steel tables, etc...)

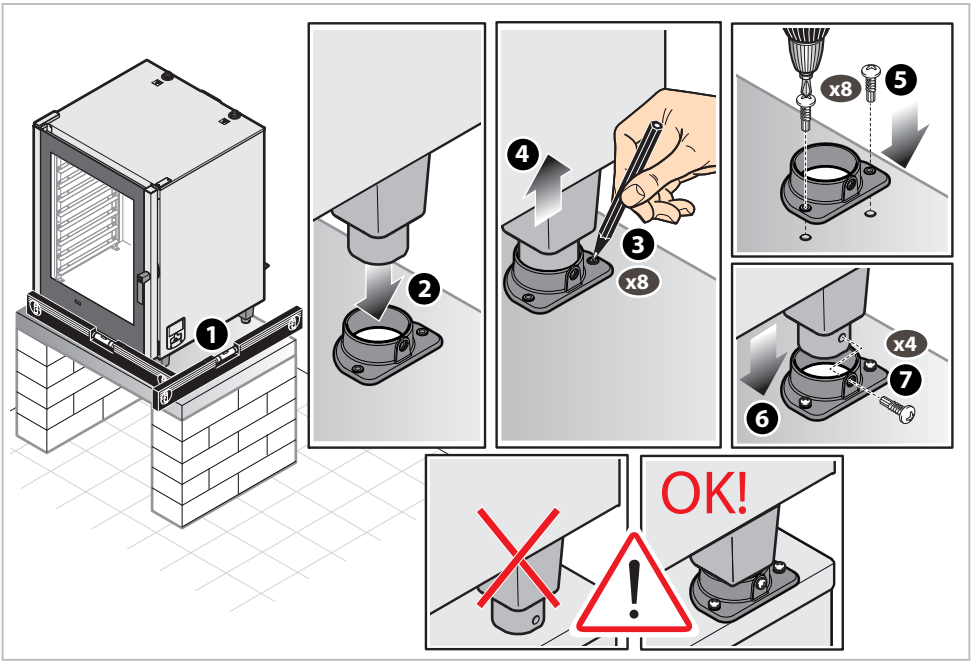

Anchoring on UNOX substructures

(UNOX - provers, blast-coolers, or neutral cabinets/**Pollo**)

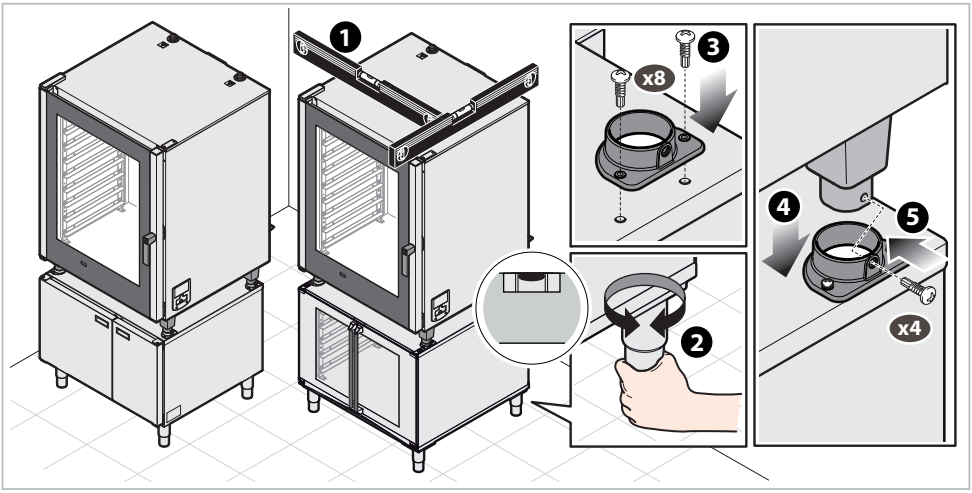

Anchoring on UNOX substructures
(UNOX - high open stand)

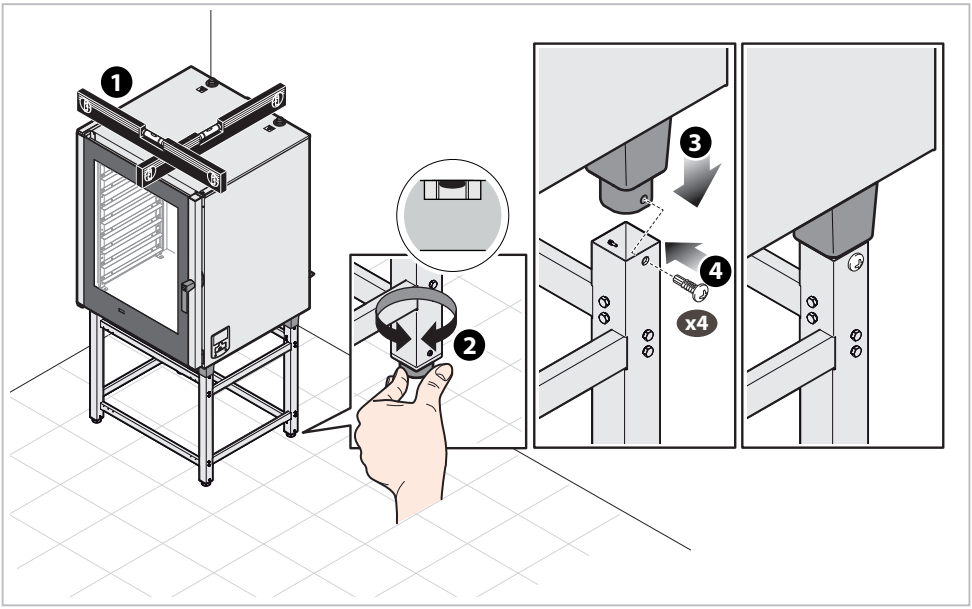

Positioning: appliance stacking (Maxi.LINK)

Use UNOX's oven stacking kit when stacking several units.
It maintains the proper distance between appliances and simplifies electrical, plumbing and exhaust connections.
Follow the instructions on the oven stacking kit for kit assembly.

The oven should never be placed immediately above other ovens or other sources of heat.

The oven stacking kit also contains an RJ45 cable, a siphon and a Tee fitting for plumbing several appliances with a single water intake.

For information on how to interconnect stacked appliances or additional accessories (provers, hoods, osmosis kits, etc...) and installation of the RJ45 cable consult chapter ***"Connecting stacked appliances (MAXI.Link)"*** *at page* ***40.***

Examples of possible compositions:

Positioning - FREE-STANDING OVENS WITH/WITHOUT TROLLEY

Ovens of this type must exclusively be set on floors that meet the following requirements:
- be flame and heat resistant;
- be perfectly level;
- have a flat and even surface;
- are able to support the appliance weight at full load without undergoing deformation or structural failure.

Levelling the appliance

❶ Make sure that the length of the oven cavity diagonals are the same; if this is not the case, it implies that the appliance is not flush-> ❷ level it by adjusting the height of the 4 feet.
Minimum height from the ground must be 173 cm. to allow the trolley easy access.
Once level,check to see that the trolley enters easily into the oven cavity without encountering obstacles (e.g. floor irregularity) and without brushing against the bottom surface of the oven cavity.
Further adjust the feet if necessary.

Finish by compulsorily anchoring the 2 front supports to the floor to avoid capsizing (see figure on the following page).

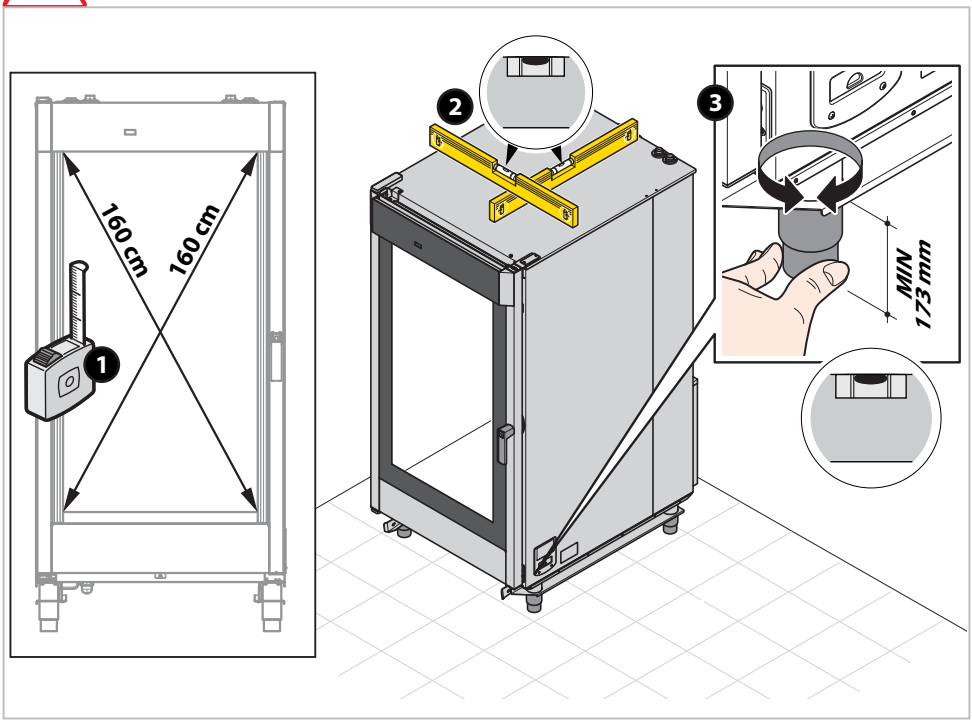

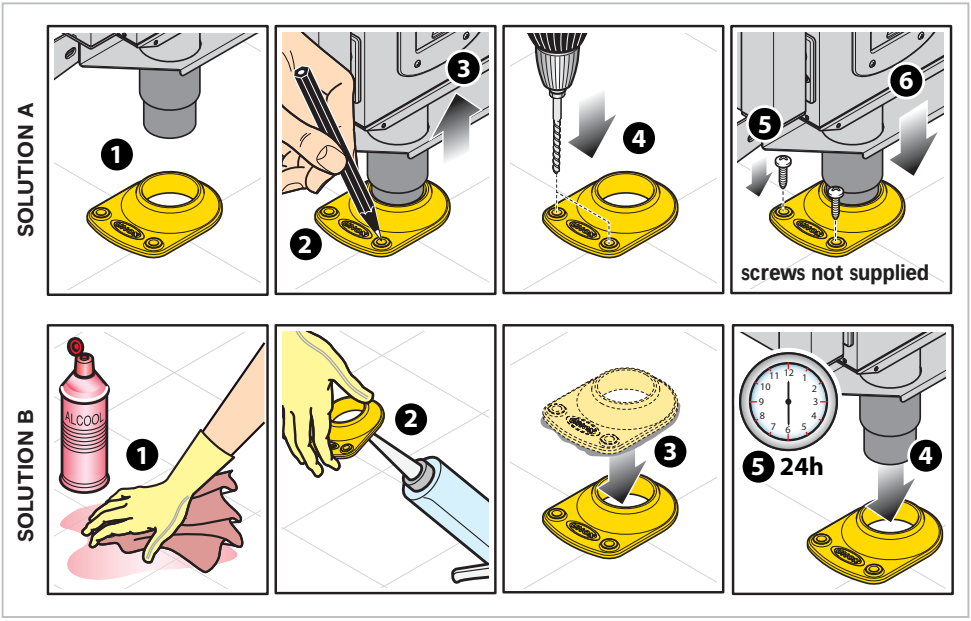

only for free-standing trolley ovens

If the floor is not perfectly flush, a loading ramp **with a maximum incline of 4°** may be used to simplify trolley loading. **The maximum floor incline allowed is 2°.**

If floor incline exceeds this value, hot liquids may spill from the trays during loading/extraction and cause burns.

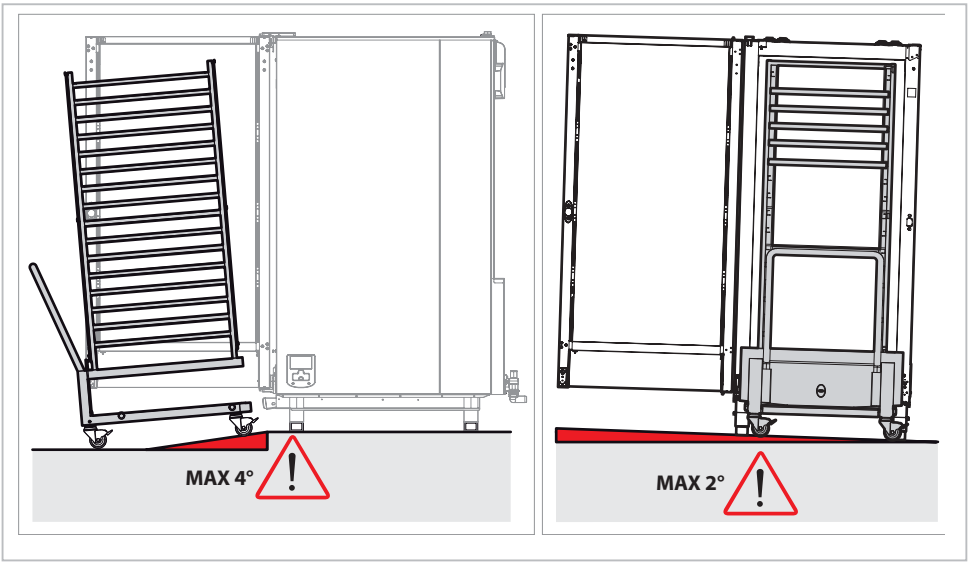

Adjustments

Door closure adjustment

After positioning the oven, proceed as follows if the door handle fails to close in the correct upright position:

❶ check that the appliance is flush by using a spirit or digital level;

❷-❼ if the appliance is level, adjust the closure latch as shown in the following figures.
If the problem persists, repeat this procedure, loosening the latch fixing screws further.

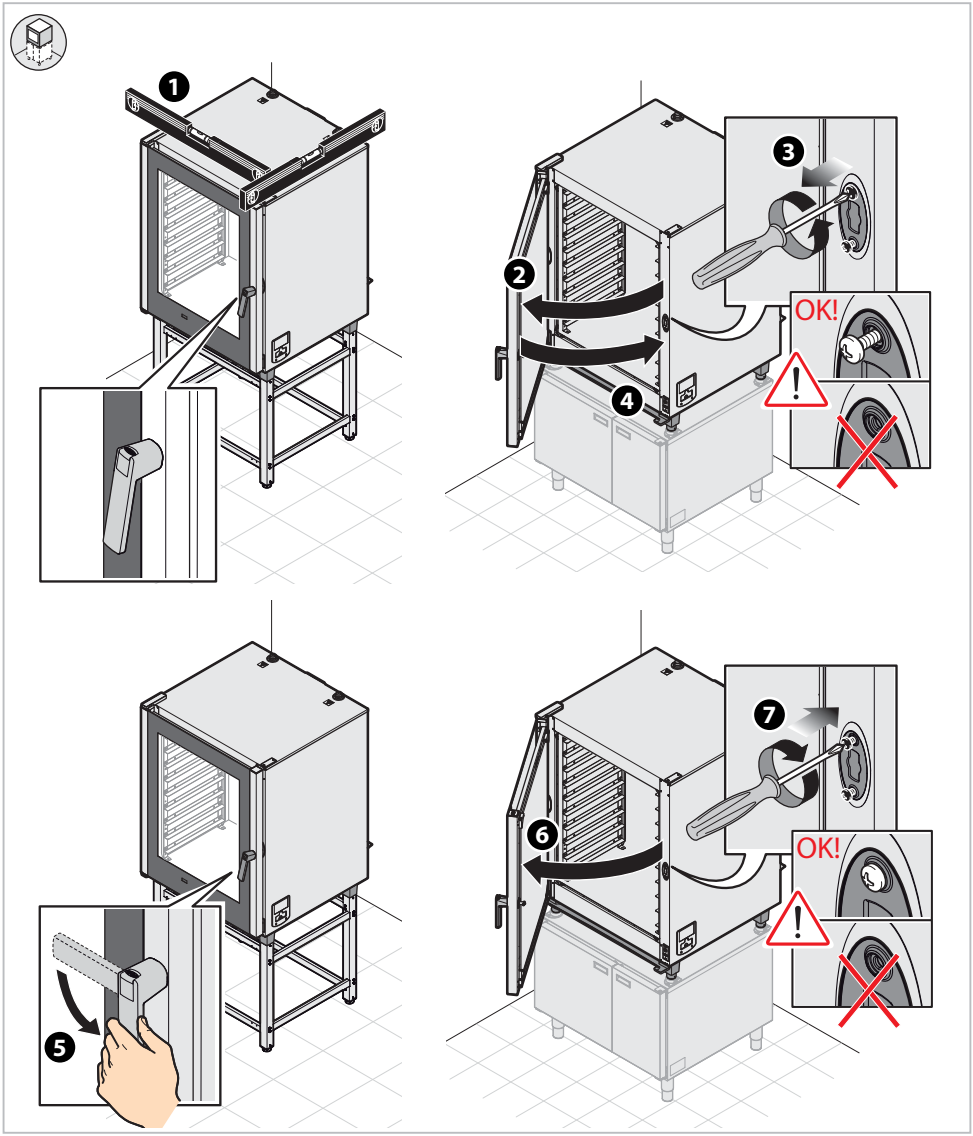

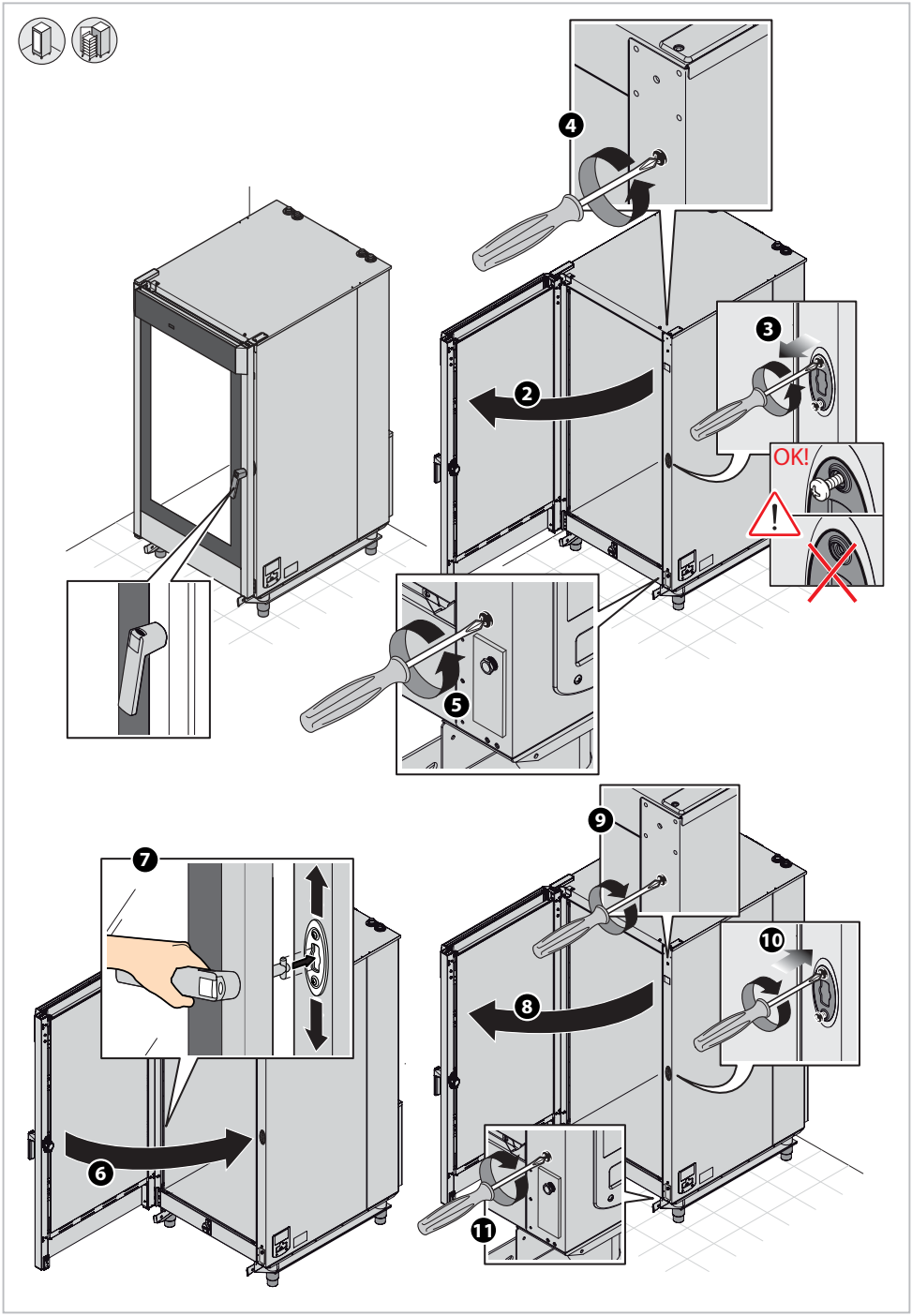
4
3
2
OK!
5
9
7
10
8
6
11

Electrical connections

Before installing the appliance carefully read chapter "*Safety regulations*" at page *5*.

Connections to the power main and the electrical system must comply with the regulations in force in the country of installation of the appliance; and all connections must be performed by qualified installer authorised by UNOX. Failure to comply with these regulations may cause damage and injuries, invalidates the guarantee and relieves UNOX of all liabilities.

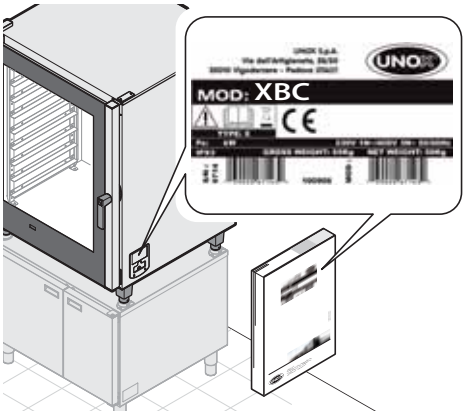

The wiring diagrams, the wire specifications and the technical data are indicated on the "Technical specifications " sheet attached to the appliance.

Electrical connections should be performed by mounting a power plug (not supplied) of type and load adequate to the maximum power absorbed by the oven's phases **A** (data available on the attached "Technical specifications" sheet). If this is not possible, the wiring cables supplied by UNOX are sufficient for direct connection to the electrical board **B**.
Before connecting the appliance to the electricity mains, always compare the power supply data with that of the appliance specified on the rating plate.
The appliance has its power cable already factory mounted to the terminal board; for different power and voltage requirements consult chapter ***Adapting to different voltage*** at page ***27***.
Oven having only a single-phase Schuco plug may not undergo any other type of electrical connection and no dimensional modification of the cable other than extensions, replacing it only with one having specifications equal to the original factory cable (type of rubber, cross-section, etc.); all specifications are listed on the "Technical Specifications" sheet attached to the appliance.

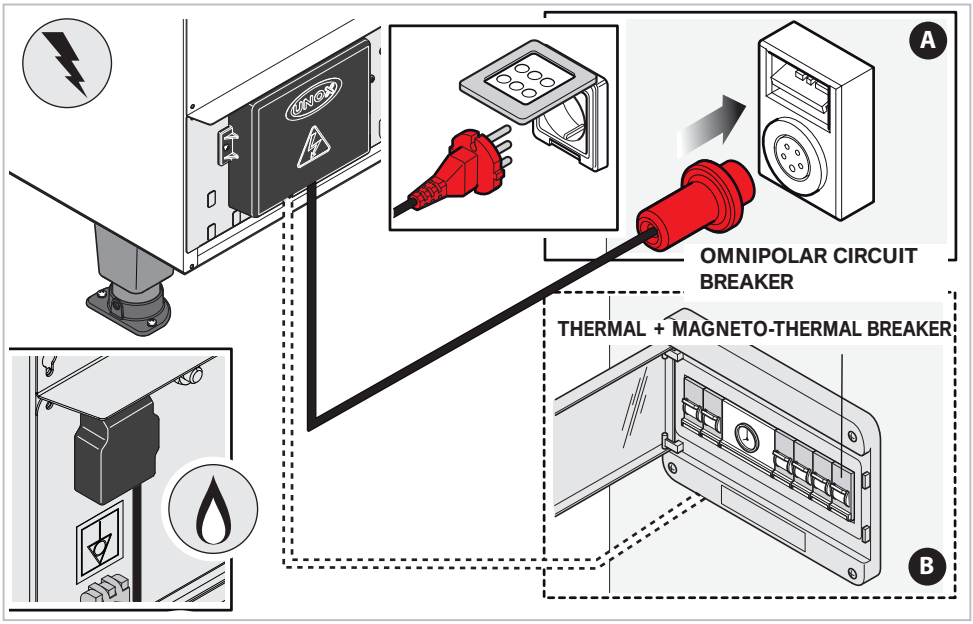

For proper electrical connections, the appliance must:

- Be wired into an equipotential system according to what is stated in the regulations in force. This connection must be performed between different appliances with the terminal marked with the equipotential symbol . The wire must have a maximum cross-section of 10 mm2 (according to IEC EN 60335-2-42:2003-09 standard) and be yellow-green.
- Must be grounded to the earthing (green-yellow wire).
- Must be connected to a thermal differential switch as in compliance with the regulations in force.
- Must be connected to an omnipolar circuit breaker.

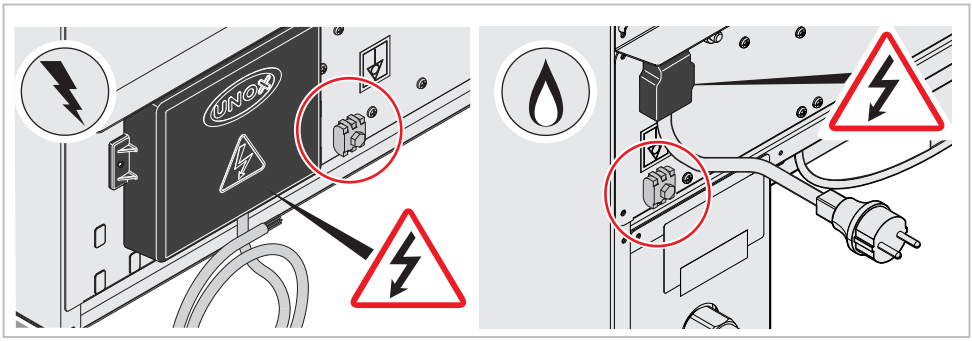

Checks

- The copper jumper and the electrical cable must be secured together beneath the screw in its tightening direction; and the electrical connections must be well secured before connecting the appliance to the electricity mains.
- check for any electrical dispersion between the phases and the ground, and for electrical continuity between the external casing and the main ground line.
- Check that the power supply voltage does not deviate from the nominal voltage value specified on the appliance rating plate when the appliance is operating. If this is not the case, wire the phases as specified on the "technical specifications" sheet attached.

Adapting to different voltage

For electrical and voltage requirements that differ from standard values, it is necessary to replace the power supply cable and connect the new cable to the terminal board following the diagrams on the "Technical specifications" sheet *(Power supply - Connection Diagram)* attached to the appliance.

Replacing the power supply cable

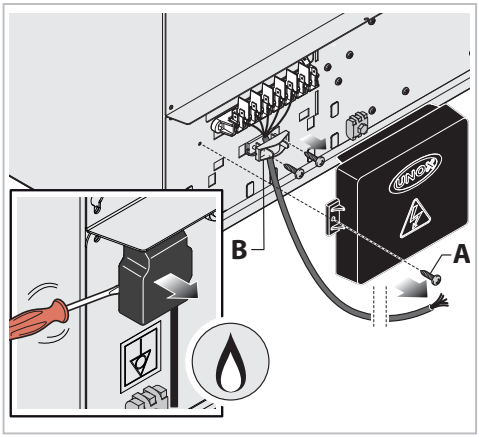

The cable must be replaced by UNOX or by its technical assistance service, and in all cases by a person with similar qualification in order to avoid possible risks.

Follow the procedures below to replace the power supply cable:

- open the terminal board cover by unscrewing screw "A";
- remove the cable by disconnecting it from the terminal board and cable clamp "B";
- consult the "Technical Specifications" sheet *(Power supply-Connection Diagram):* the sheet indicates all possible wiring diagrams and the specifications that the new cable must have in reference to the wiring selected *(Cable Type)*;
- secure the new cable using the cable clamp;
- Close the terminal board cover by securing the fixing screws.

LPG gas connection (only for gas ovens)

Before installing the appliance carefully read chapter "*Safety regulations*" at page *5*.

Connections to the gas supply and the gas utility lines must comply with the regulations in force in the country of installation of the appliance; and all connections must be performed by qualified installer authorised by UNOX. Failure to comply with these regulations may cause damage and injuries, invalidates the guarantee and relieves UNOX of all liabilities.

Connecting to the gas utility system

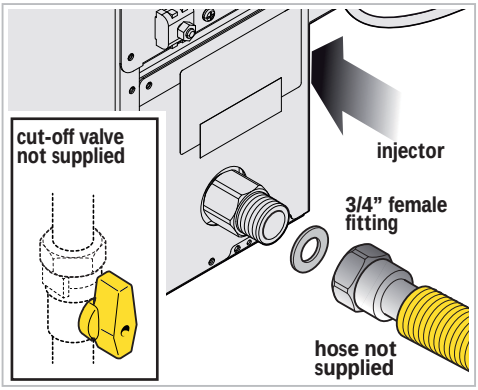

The appliance is factory set, configured and tested to operate using:
- LPG gas (butane/propane type G30/G31)
- nominal pressure of 28/30/37 mbar.
- maximum gas inlet pressure of 55 mbar.

Make sure that the gas supply and pressures comply with above indications before connecting the appliance (which are also listed on the specifications label): otherwise consult chapter ***"Adapting to different gas supplies"***

The 3/4" female type attachment for connection to the gas utilities is in the back of the oven: the oven must be connected using a flexible pipe with a cut-off valve (not supplied) placed upstream of the appliance.

Components sealed with red paint must never be adjusted!

Unox provides upon customer request an adapter whose diameter varies in relation to oven model to connect the evaacuation switch to the wind deflector device.

Make sue that the piping does not run next to hot areas and that they are not subject to pulling, twisting or crushing forces.

The gas supply system and all attachments must be up to code and respect the regulations in force in the country of use.

Adapting to different gas supplies

CHANGING INJECTOR

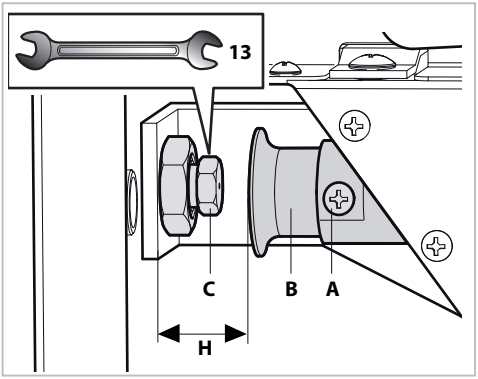

Operations to adapt the oven to another type of gas must be exclusively performed by qualified installer authorised by UNOX.

Shut the cut-off valve, disconnect power and check that the diameter of the replacement injector in 1/100 mm matches the value printed onto it.

1) Unscrew and remove injector C using a 13 mm spanner.
2) Install a new injector that is suitable to the type of gas used (see ***"Table C" columns A and B***).
3) Loosen screw "A".
4) Position bushing "B" at distance H in relation to the injector used (see ***"Table C" column C***).
5) Loosen screw "A"once again.

Table C

MODELS	GAS column A	Ø INIJECTOR [1/100 mm] column B	BUSHING B DISTANCE column C
XBC615EG	G20, G25, G25.1	345	H = 39mm
	G30, G31	225	
XBC815EG	G20, G25, G25.1	375	H = 39mm
	G30, G31	235	
XVC315EG	G20, G25, G25.1	275	H = 39mm
	G30, G31	180	
XVC515EG	G20, G25, G25.1	330	H = 39mm
	G30, G31	215	
XVC715EG	G20, G25, G25.1	360	H = 39mm
	G30, G31	230	
XVC1215EG	G20, G25, G25.1	345	H = 39mm
	G30, G31	225	
XVC2015EG	G20, G25, G25.1	375	H = 39mm
	G30, G31	235	
XVC915EG XVC1015EG XBC915EG XBC1015EG	G20, G25, G25.1	340	H = 39mm
	G30, G31	225	
XVC4015EG	G30, G31	225	H = 39mm

Gas nozzles G30 and G31 are installed on all models

Table D - Gas valve outflow pressure

GAS	MAX pressure[mbar]	MIN pressure[mbar]
G20	14,2 ± 2%	7
G 25 - G25.1	21,2 ± 2%	10
G30 - G31	26,2 ± 2%	13

SETTINGS LABEL

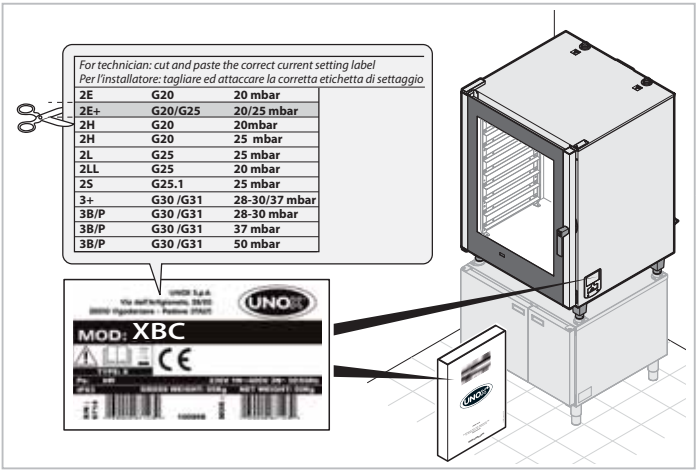

At installation and after every adaptation to gas type, remove the indelible sticker shown in the figure from the Starter Kit and cut out the settings label that has the new gas parameters. The sticker must be applied onto the data plate.

CONTROL PANEL

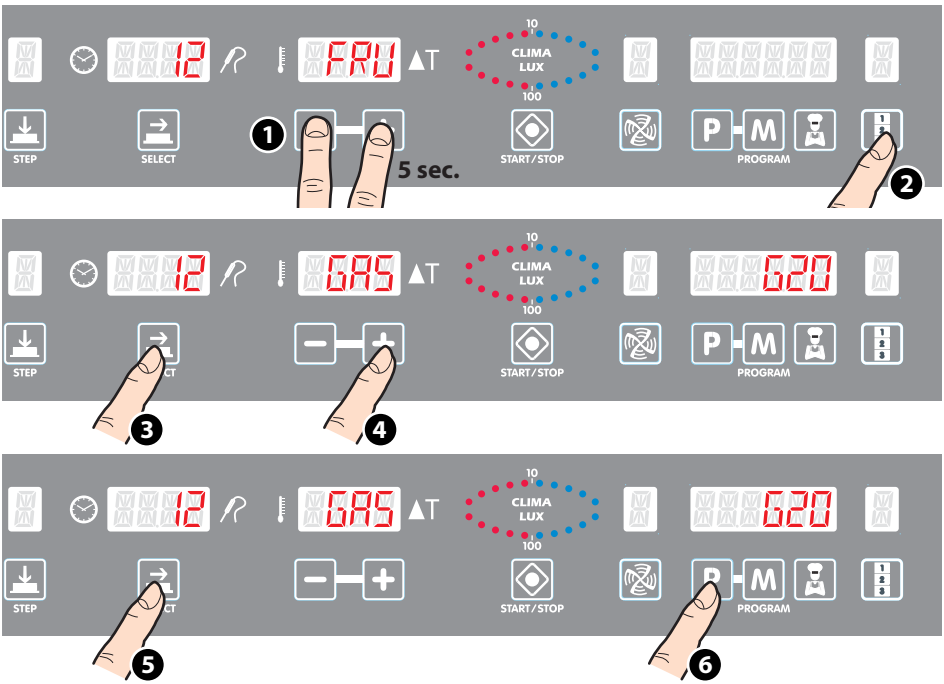

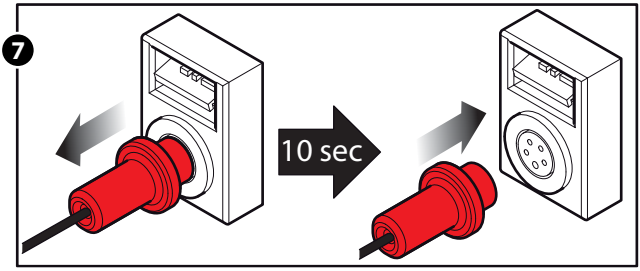

❶ Enter the hidden menu by simultaneously pressing the two buttons [−] [+] for 5 seconds.

❷ Press the [1 2 3] button until calling up the display: 12 - FrU

❸ Press the [→] button until calling up "GAS" on the screen.

❹ Press the [−] [+] buttons until selecting the gas used (caution: G25 also includes type G25.1 and G30 includes type G31).

❺ To save changes hold the [M] button for 5 seconds until to hear acoustic signal confirmation

❻ Exit by pressing the [P] button.

❼ Permanently confirm the new type of gas parameters by disconnecting the power from the oven for 10 seconds and then restoring it.
Failure to perform this last step will result in NO gas configuration save. In this case, the procedure must be repeated from step ❶.

Post-connection checks

Check the items listed in the table after connecting the oven to the gas utility or after adjusting to a new type of gas.

√	Check:	Check result
☐	The air-tightness of the gas circuit using NON-CORROSIVE foam substances. Never use flames!	
☐	Nominal supply pressure using a fluid pressure gauge (e.g. a electric manometer). If values detected deviate from min. and max. pressure listed in the "Technical Specifications" sheet (*CHART A*) attached to the appliance, contact the local gas utility company.	mbar.....
☐	The gas valve outflow pressure. Compare values with those of ***"Table D - Gas valve outflow pressure"*** *at page* ***29***.	min mbar..... max mbar.....
☐	The values of CO - CO^2 of the exhaust gas and record values detected. The burner settings must be checked and adjusted by a specialised technician for values of non-diluted CO greater than 1000 ppm.	ppm.....

If the tests were positive, power and start-up the appliance, and through the air vents, check the points listed in the table:

√	Checks:	Check result - OK
☐	Proper burner ignition	
☐	Bright blue flame with no yellow tips	
☐	Gas exhaust pipe and air vents clean and free of obstructions	

Instruct the user about the basics of safe oven operation with respect to this installation, use and maintenance manual.

Plumbing connections

Plumbing: water supply

The rear of the appliance contains:

A 1,5 meters of hose, mechanical filter and (3/4") attachment with non-return valve for plumbing. Before connecting the water pipe to the appliance, flush it out with water in order to eliminate any residue which has accumulated inside it.
A shut-off valve should be positioned between the water mains and the appliance;

B a pipe to supply detergent for cleaning the oven cavity;

C two attachments for connecting additional water treatment accessories (UNOX.Pure or UNOX.Pure-RO).
Follow instruction on the accessory package for connection.

To simplify plumbing in cases of multiple column connections (Maxi.LINK) use the Tee in the UNOX oven stacking kit.

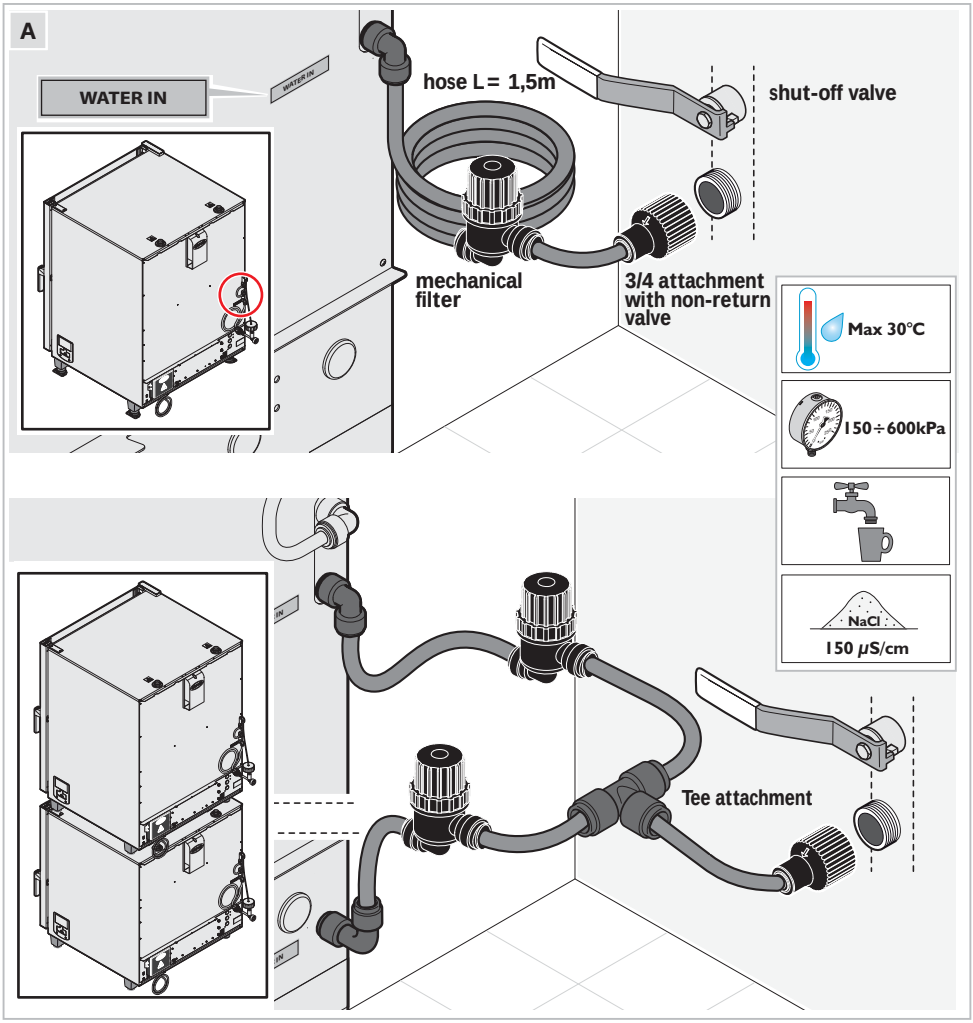

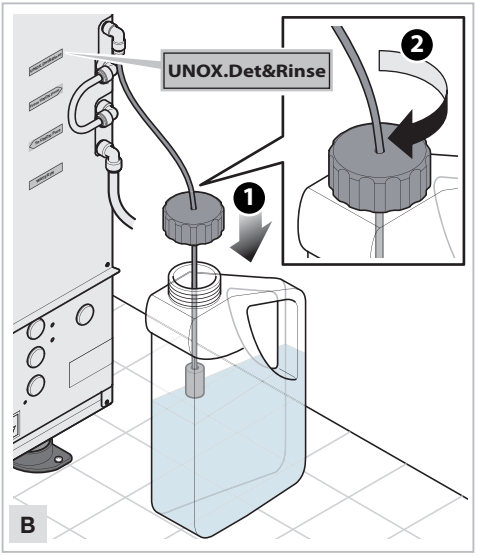

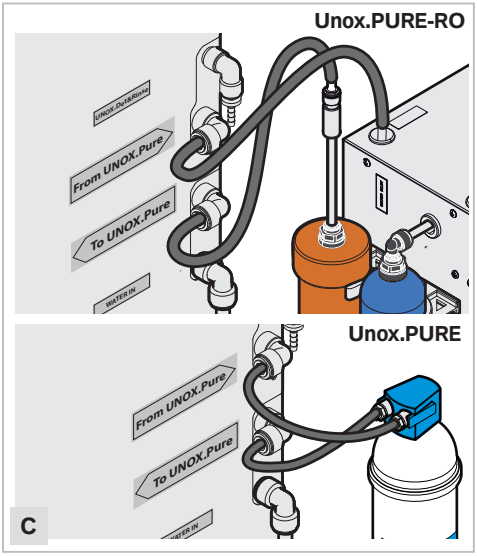

Water supply: specifications

The water supply must:
- have a maximum temperature of 30 °C;
- be drinkable;
- have maximum conductivity of 150 µS/cm;
- have a pressure in the range of 150 and 600 kPa (200 kPa recommended).

If the pressure of the water supply at the inlet is too low (150kPa), a pump with a suitable flow rate should be used (minimum flow rate 300 l/h). ChefTop™ and BakerTop™ ovens have a built-in pressure reducer.
If the water hardness is greater than the value specified (150 µS/cm), use a demineralizer (UNOX.Pure or UNOX. Pure-RO) or filters to avoid limescale and/or other minerals from depositing inside the oven. Damage caused by limescale or other chemical agents carried by the water is not covered by the guarantee.

UNOX recommends it filters "Unox.PURE" or its reverse osmosis kit with "Unox.PURE-RO" pump if water pressure is low or water is especially hard. The reverse osmosis kit is directly managed with a self-diagnostic system from the oven's electronic control system.
Follow the instructions on the packaging of these parts for their assembly/disassembly.

If the appliance cannot be permanently connected to the water mains, a water tank and pump kit for drawing water from the tank or from another external vessel is available from UNOX.

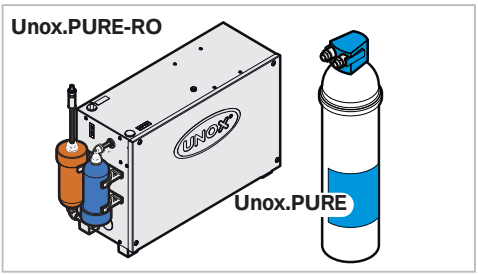

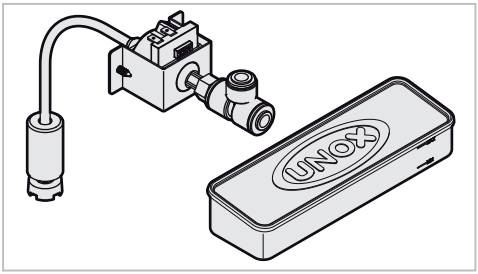

Plumbing: water drainage

The drain is located:

- on the bottom of countertop ovens
- on the back of free-standing ovens with or without trolley .

Connect the bend/siphon to a rigid pipe or flexible hose and connect the assembly to waste water drainage.

UNOX recommends its proprietary rigid pipes and flexible hoses.

The waste water draining from the oven may be hot (90°C).
The pipes used for water drainage must be able to withstand high temperatures and not be made of metal.

If it is necessary to lower the temperature of the waste water, UNOX recommends its waste water cooling kit.

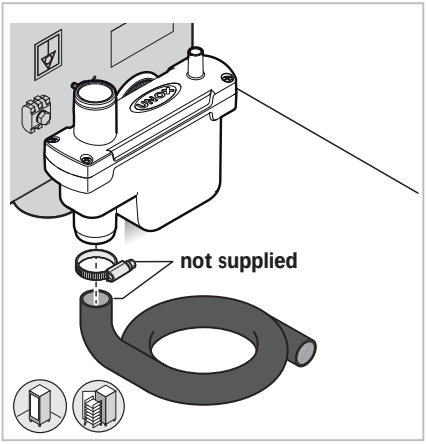

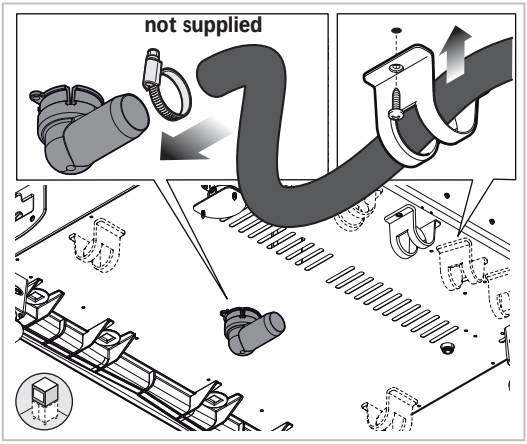

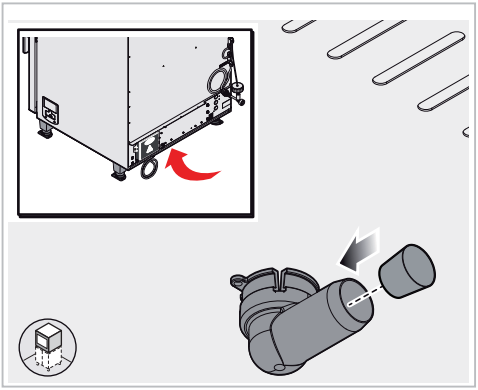

If the appliance cannot be permanently connected to a drainage system, the drainage terminal must be sealed with the conical plug supplied inside the “Starter kit”. Make sure that it is easy to reach the back of the oven in order to frequently inspect and clean the drainage terminal.

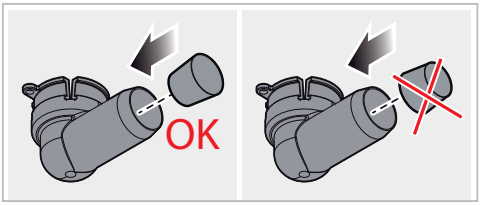

Drainage specifications

The drainage system must:
- be a siphon-type;
- have a one meter maximum length;
- have a minimum incline of 4%;
- have a diameter that is NOT less than the drain pipe attachment;
- be dedicated to each appliance; if this is not the case, make sure that the main drainage pipe is sized sufficiently to ensure that water flows away properly without any problems;
- be free of kinks.

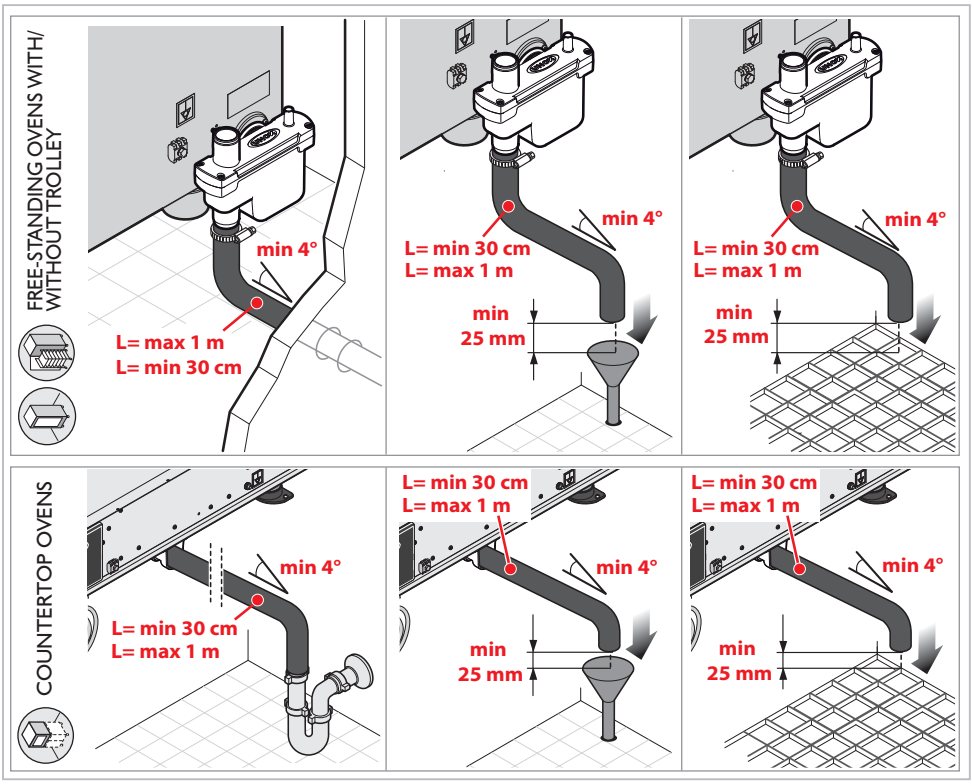

Plumbing: interventions

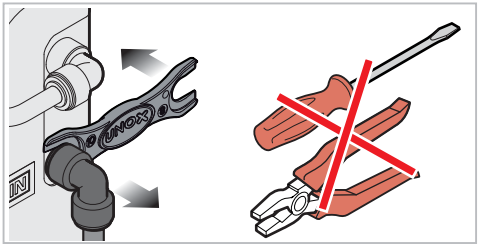

If it is necessary to disconnect the "quick coupling" attachments, such as for maintenance or to install an accessory, use the wrench supplied in the "Starter Kit": using other tools (i.e. screwdrivers, pliers, etc...) could damage the part and compromise the seal.

Indicative example of plumbing in MAXI.Link columns

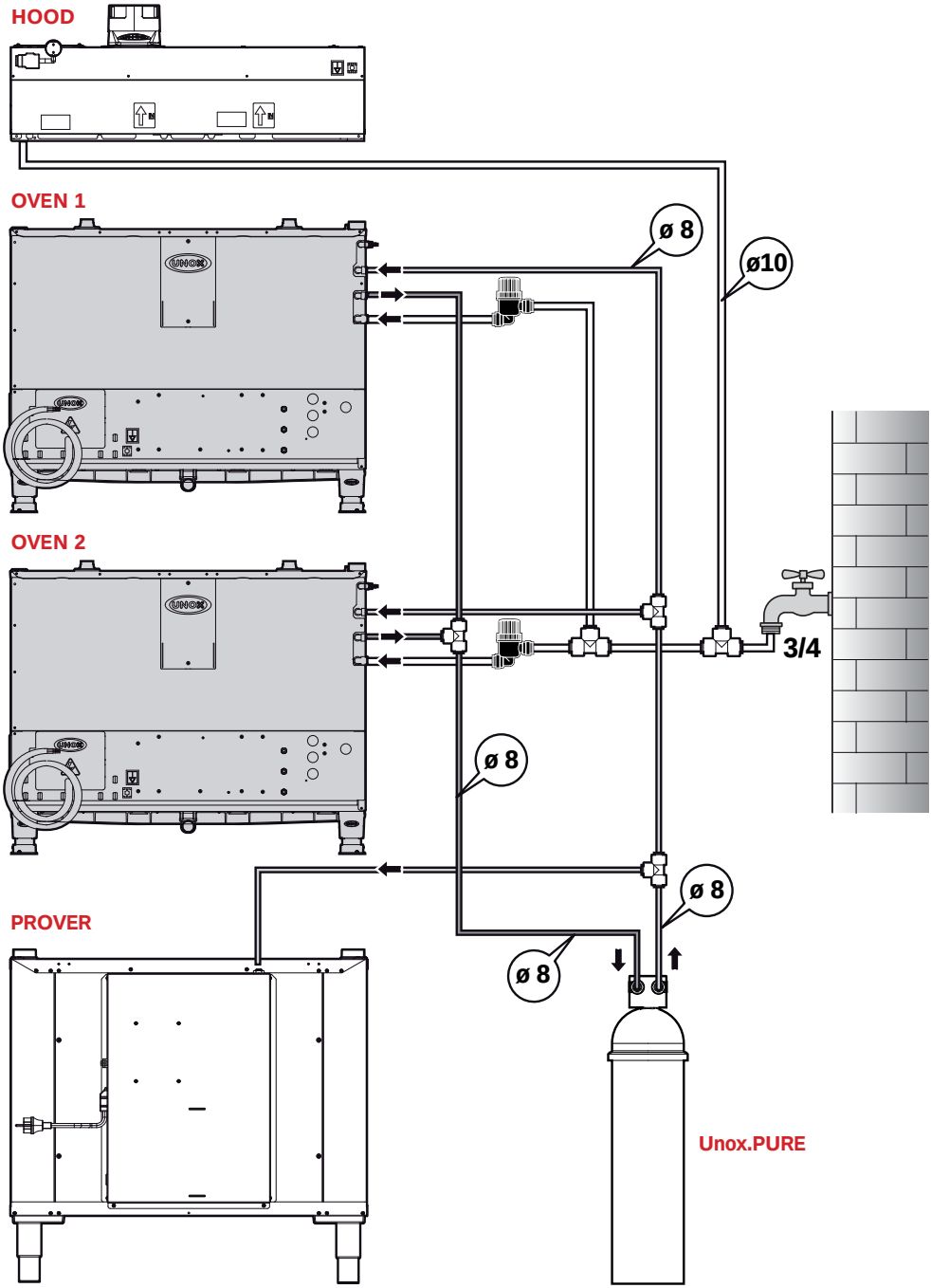

Indicative example of plumbing in MAXI.Link columns

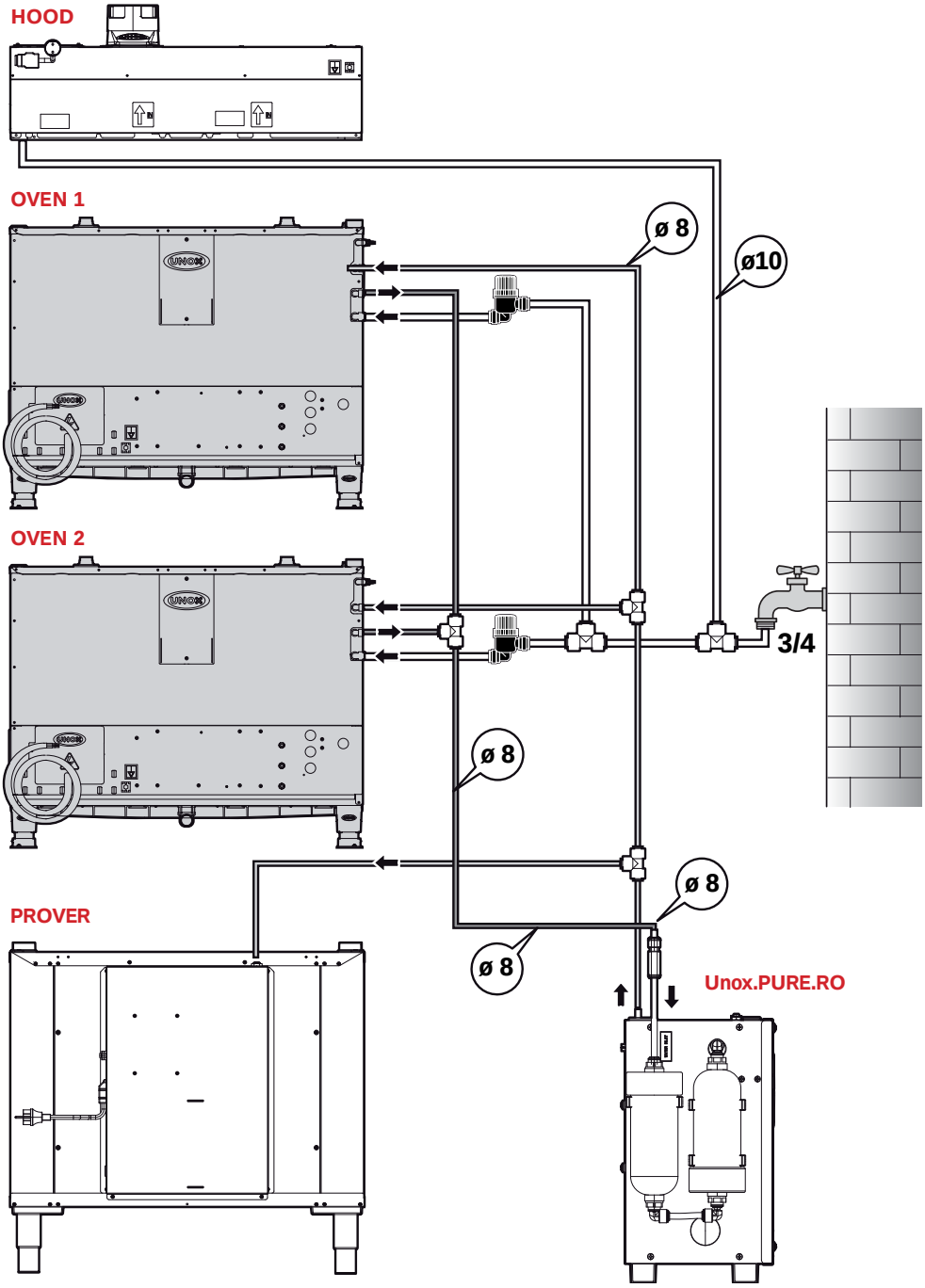

Smoke exhaust (only for electrical ovens)

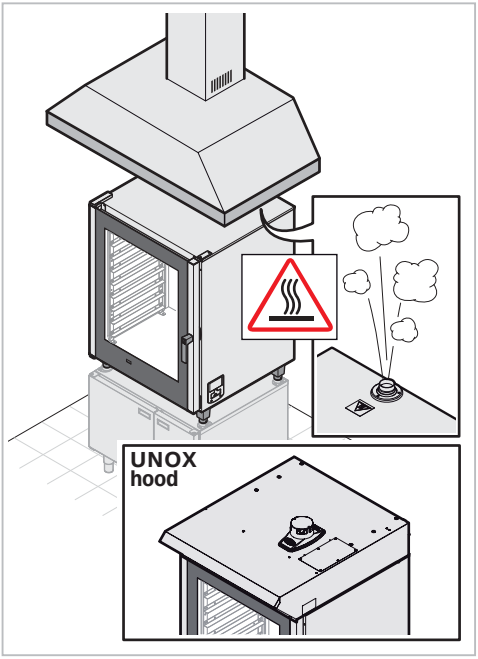

Cooking produces hot smoke and odours that are evacuated through an exhaust pipe on the top portion of the appliance.

Make sure that no objects or materials that may obstruct fume evacuation or become damaged by the temperature or fumes are placed above the smoke exhaust. Do not leave flammable materials near the smoke exhaust.

Outdoor evacuation of smoke can be done using:

1) a hood of adequate power and size for the type of oven.

UNOX recommends its hoods, directly controlled by the oven's self-diagnostic system.

Follow the instructions on the UNOX hood packaging for their assembly.

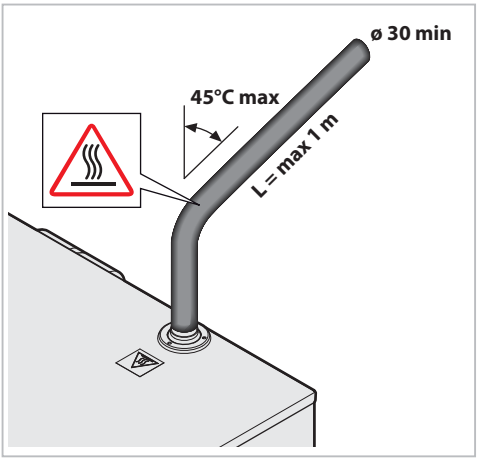

2) a pipe with no air suction or forced ventilation.
The pipe must:
- be INDEPENDENT for each appliance;
- have a minimum cross-section of 30 cm;
- be free of kinks;
- have an incline no greater than 45°;
- be at least one meter long.

UNOX recommends its exhaust pipe.

3) a UNOX **steam condenser**. Follow the instructions on the steam condenser packaging for their assembly.

Smoke and gas exhaust (Only for gas ovens)

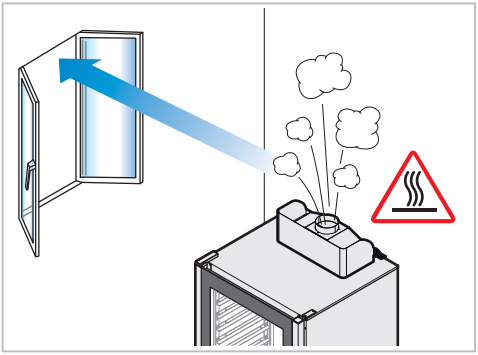

An exhaust pipe evacuates smoke and odours from the oven cavity as well as the exhaust gases. Evacuation may be done in various manners: select the method best suited to the nominal power of the appliances installed; and follow the local/national installation regulations of the country of use.

1) Ovens with kW rating < 14 direct evacuation into the oven's installation environment.

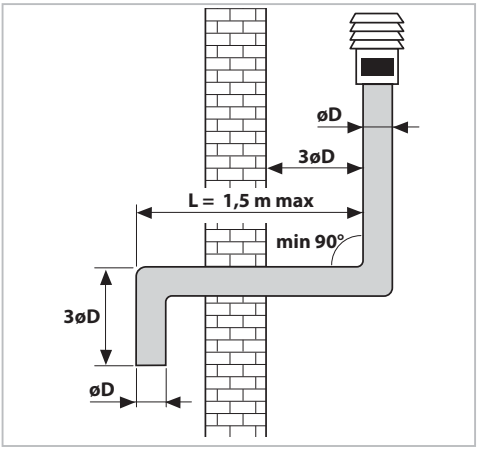

2) Ovens with kW rating > 14 evacuation through an efficient natural ventilation flue.

The ventilation flue must:

- have the same diameter (øD) throughout the entire length of the oven's exhaust pipe connection;
- have an upright section (3øD) above the ventilation switch that is 3 times the diameter øD;
- follow an upward trajectory at a minimum incline of 10%, and must incorporate no angles smaller than 90 degrees. The horizontal part (L) must not exceed 1.5 metres in length.

We recommend a flue cover be installed on top of the external end of the flue, to prevent rainwater from getting into the oven and to minimise pressure drops caused by the Venturi effect, which can occur during strong air currents.

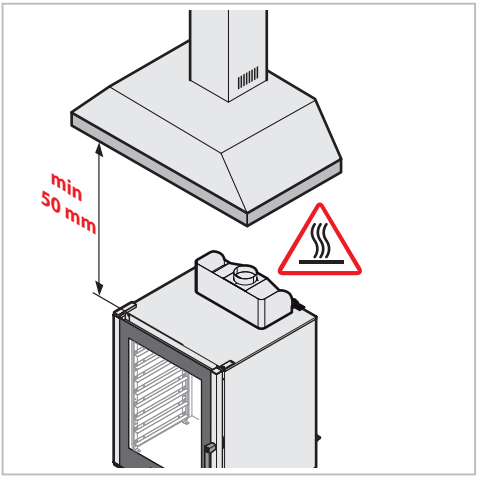

3) Ovens with kW rating > 14 evacuation by means of a hood of power and size best suited to the type of oven.

The hood must be installed at least 50 cm from the exhaust pipe: smaller distances could cause toxic unburnt gas to form.

Exhaust gases may heat up to 500°C. Do not use exhaust pipes made of aluminium or materials not resistant to these temperatures.

Make sure that no objects or materials that may obstruct fume evacuation or become damaged by the temperature or fumes are placed above the smoke exhaust. Do not leave flammable materials near the smoke exhausts.

Connecting stacked appliances (MAXI.Link)

Connecting appliance with RJ45 cable

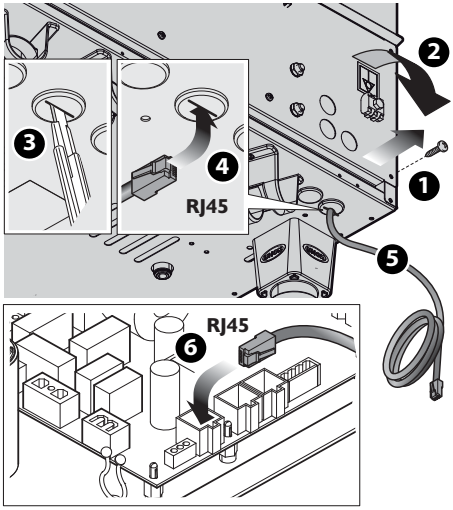

All ChefTop and BakerTop ovens are factory prepared to be connected together or to accessories (prover, hood, blast-chiller, osmosis system, etc.). **The accessories connect to the oven by means of RJ45 connectors located on the back of the ovens, which automatically connect.**

❶ Disconnect all appliances from the electricity mains.
❷ Remove the rear panel to access the power board.
❸ Use a cutter to make a vertical slit in one of the rubber caps on the panel behind the oven
❹ Thread one end of the RJ45 cable through the slot.
❺ Insert the end of the cable into the corresponding female connector on the power P.C.B. (it does not matter which of the three connectors is used).
❻ Replace the protective cover and tighten the screws.
❼ Reconnect all the appliances to the electricity mains.

Follow the instructions of the accessory packing for information on how to install and manage them.

Setting ovens as “MASTER” or “CONTROLLED”

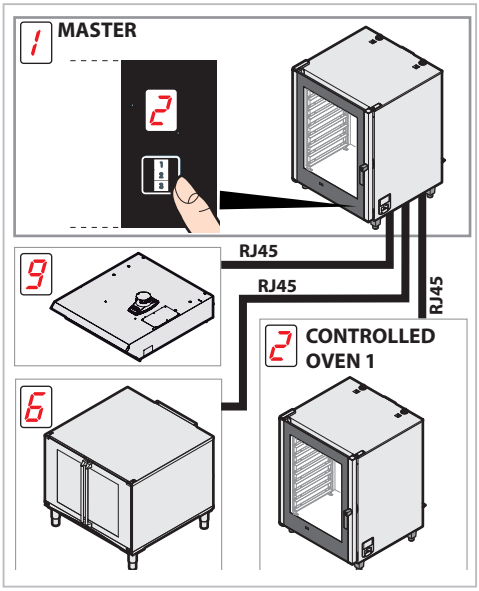

When dealing with more than one UNOX oven, for sake or practicality it is best to set one oven as main (MASTER) and the others, to a maximum of 3, as auxiliary (CONTROLLED)..
All "CONTROLLED" ovens and connected add-ons (i.e. hood, prover, reverse osmosis kit, etc...see ***“Table E”***) can be managed from the "MASTER" oven control panel.
The EFFICIENT.Power technology cuts the baking station's power consumption of up to 33% by better exploiting distribution of electrical power.

The standard ovens are configured as “MASTER”. Maintain the ovens independent (all "MASTER") by not executing the following configuration and by not connecting them with the RJ45 cable. The ovens will not function if they are connected with the network cable without executing the setting procedure (message “NOANS” - no answer - on the screen).

Table E

No. appliances	BakerTop™ Range Devices
1	BakerTop™ Oven - MASTER
2	BakerTop™ Oven - CONTROLLED 1
3	BakerTop™ Oven - CONTROLLED 2
4	BakerTop™ Oven - CONTROLLED 3
6	Prover
7	Reverse osmosis system
8	Static oven - Deck oven
9	Hood
10	Ovex.NET

No. appliances	ChefTop™ Range Devices
1	ChefTop™ Oven - MASTER
2	ChefTop™ Oven - CONTROLLED 1
3	ChefTop™ Oven - CONTROLLED 2
4	ChefTop™ Oven - CONTROLLED 3
5	Blast-chiller
6	Temperature maintainer Slow cooking oven
7	Reverse osmosis system
8	Static oven
9	Hood
10	Ovex.NET

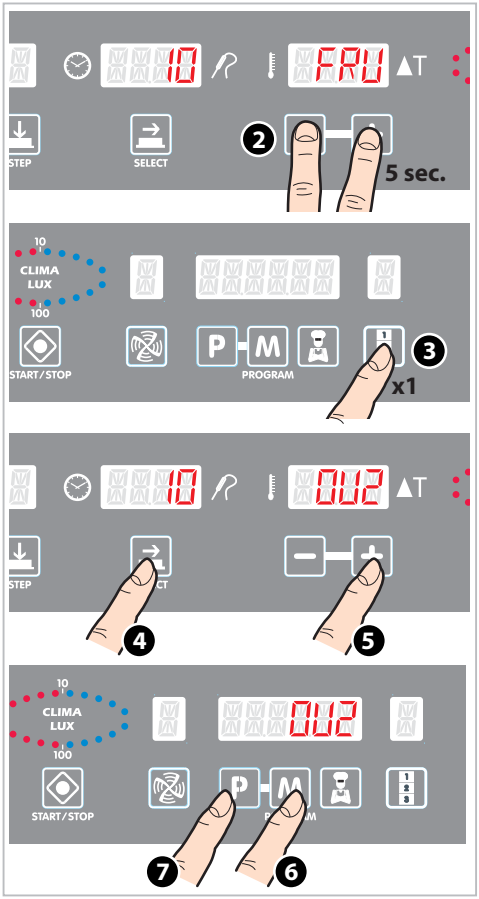

❶ Disconnect the RJ45 network cable that connects the ovens (see chapter ***Connecting appliance with RJ45 cable*** at page ***40***). If this is the first installation, the ovens are already independent.

❷ Switch ON the oven that will be set as "CONTROLLED" (DO NOT initiate any cooking cycle such as cooking): use the control panel to enter the hidden menu by simultaneously pressing and holding for 5 seconds the [−] [+] buttons.

❸ Press the [1 2 3] button once -> the number 10 is highlighted on the time screen.

❹ Repeatedly press the [→] button until calling the "OU" parameter onto the screen.

❺ Repeatedly press the [+] button until the program screen displays the number you wish to assign to the "CONTROLLED" oven from which the settings are made (see ***" Table E"***).
If connecting only 2 ovens, assign the setting OU2 to the "CONTROLLED" oven.

❻ To save the assigned setting hold and press the [M] button for 5 seconds until hearing the save confirmation signal.

❼ Press the [P] button to exit the hidden menu.

❽ Disconnect the power cable from the "MASTER" and "CONTROLLED" ovens.

❾ Connect the ovens with the RJ45 cable.

❿ Simultaneously connect the oven plugs.

Connecting the external USB interface kit and safety thermostat reset button

Consult the instructions on the external peripherals and accessories to mount and manage these.

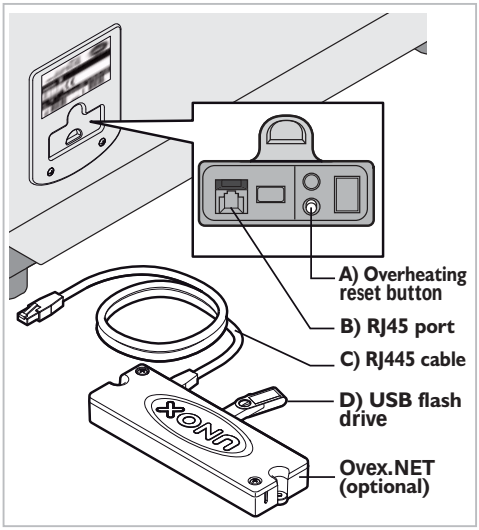

An overheating reset button (A) and an RJ45 attachment port for servicing (B) are series features equipped on the right hand side of the oven.

The following user interface kits (Ovex. NET) are available on request:

"Unox.LINK USB" Kit:

Includes:

A) Overheating reset button.

C) RJ45 Cable: to connect the user interface kit.

D) USB flash drive: to update software and load programmes.

"Unox.LINK USB+ETHERNET" Kit

Includes:

A) Overheating reset button.

C) RJ45 Cable: to connect the user interface kit.

D) USB flash drive: to update software and load programmes.

E) ETHERNET: for internet connectivity through a cable that exits the component compartment through a cable pass-wall.

Examples of correct and incorrect installation

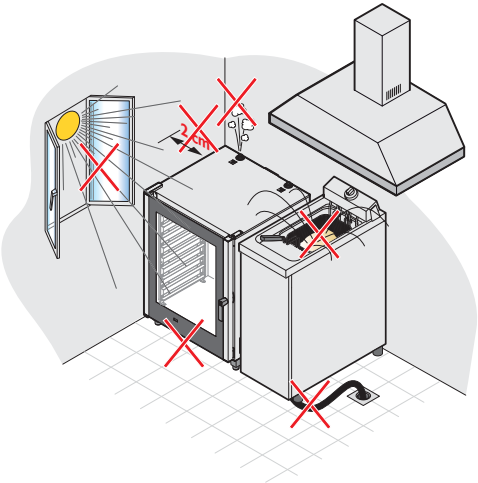

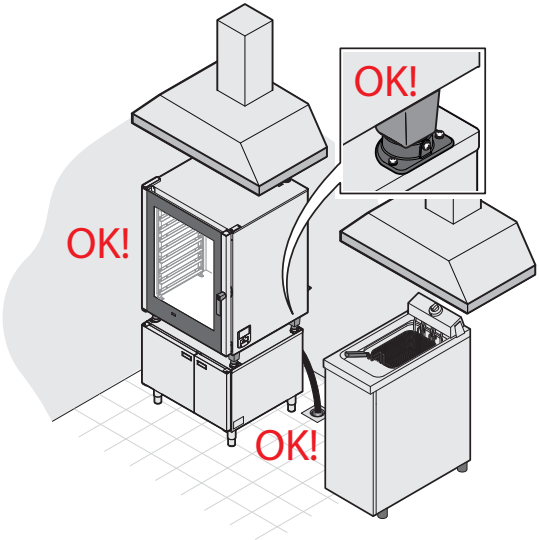

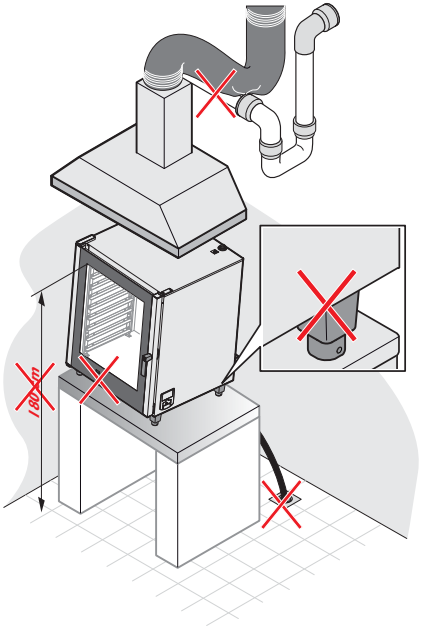

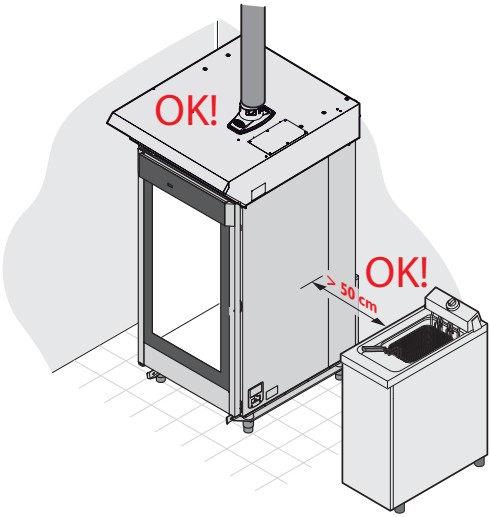

INSTRUCTIONS FOR THE USER

Contents

General appliance operating instructions 45
Cooking advice 45
Loading and using the trolleys 46
Using the core probe 47
“MASTER” ovens, “CONTROLLED” ovens and connected accessories 48
COOKING SYSTEM Pollo (only for the ChefTop™ range) 49
Use 50
- Basic notions 51
- MANUAL operation 52
- PROGRAMMED operation 57

Oven-user interface 67
Routine maintenance 72
Inactivity 76
End of life disposal 76
After-sales assistance 77
Certification 78
Guarantee 78

INSTRUCTIONS FOR THE USER

Before using the appliance:
- make sure that you have a system conformity and use permit certificate that is issued by a UNOX authorised installer;
- carefully read chapter "*Safety regulations*" at page *5*
- read the chapter *"Forward"* at page *4*.

General appliance operating instructions

- When using the appliance for the first time be sure to thoroughly clean the inside of the oven cavity and the accessories (see chap. ***"Routine maintenance"*** at page ***72***); let the oven run empty at maximum temperature for 1 hour to eliminate any unpleasant odours caused by protective factory grease.
- When the oven door is opened, unless the "COOL" function has been selected, heating and fan operation stops automatically. The built-in fan brake is activated (The fan continues to rotate for a short time only).
- If the appliance was left running for more than 15 minutes without selecting an operating or automatic cleaning mode, stand-by is automatically engaged for energy savings.
  To exit STAND-BY MODE simply touch the START/STOP button.
- Operate the appliance at a room temperature between +5°C and +40°C.
- Do not salt food inside the oven cavity. If this is not possible, clean the oven as soon as possible (see chapter ***"Routine maintenance"*** at page ***72***).

For safety reasons, the last tray should NEVER be placed at a height greater than 160 cm. If necessary to do so, **it is mandatory to post the sticker contained in the "Starter Kit" at the height shown in the figure.**

Cooking advice

- It is always better to preheat the oven to a temperature at least 30-50°C higher than is required for cooking, in order to reduce the effects of heat lost when opening the door.
- When using the grilling and roasting functions (e.g. for poultry), a drip tray should always be placed at the bottom to collect excess fat.
- Use UNOX grills and trays; try to distribute food uniformly on these while avoiding stacking and excessive quantities.
- Always respect your oven's load capacity (see chapter ***"Forward"*** at page ***4***).

Trolley loading and use (only free-standing trolley ovens)

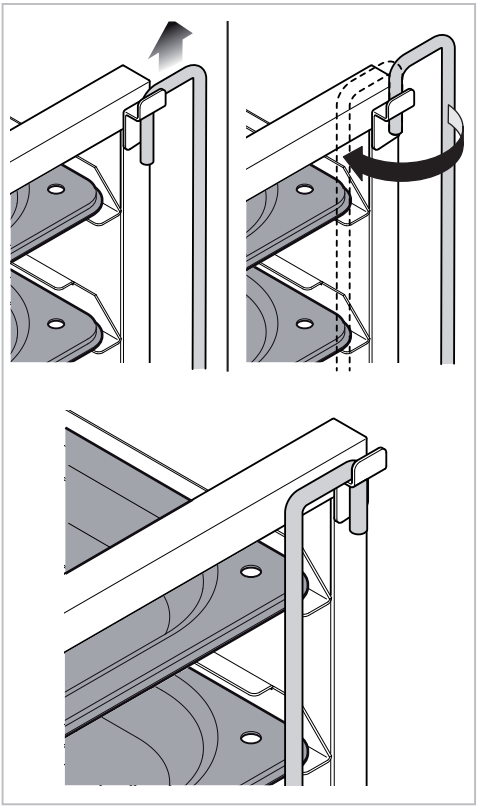

Use only UNOX trolleys, trays and grills.

- Load the trolleys without overloading them: it is normal for the trolley to be pushed downward and lower in height, depending on how full the trays are.
- The trolley is loaded into the oven using the bottom trolley guides.
- Lock the trays into place when moving the trolley as shown in the figure.
- Always lock the front wheel brakes into place after putting loads into the oven cavity and each time these are not to be moved.
- Be extremely careful when moving because the trays may contain boiling fluids that may spill or the trolleys may capsize (for example if moved across uneven or inclined floors or through doors).

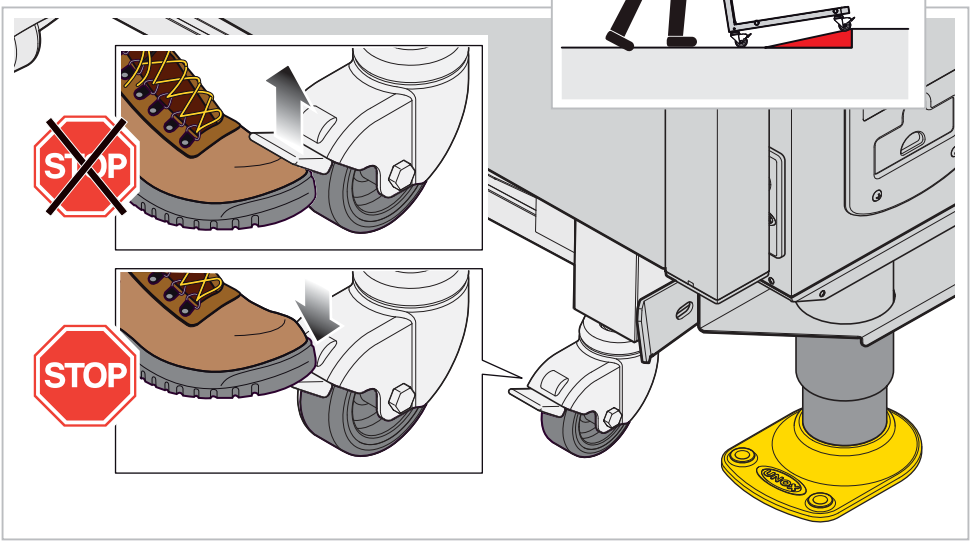

Core probe positioning

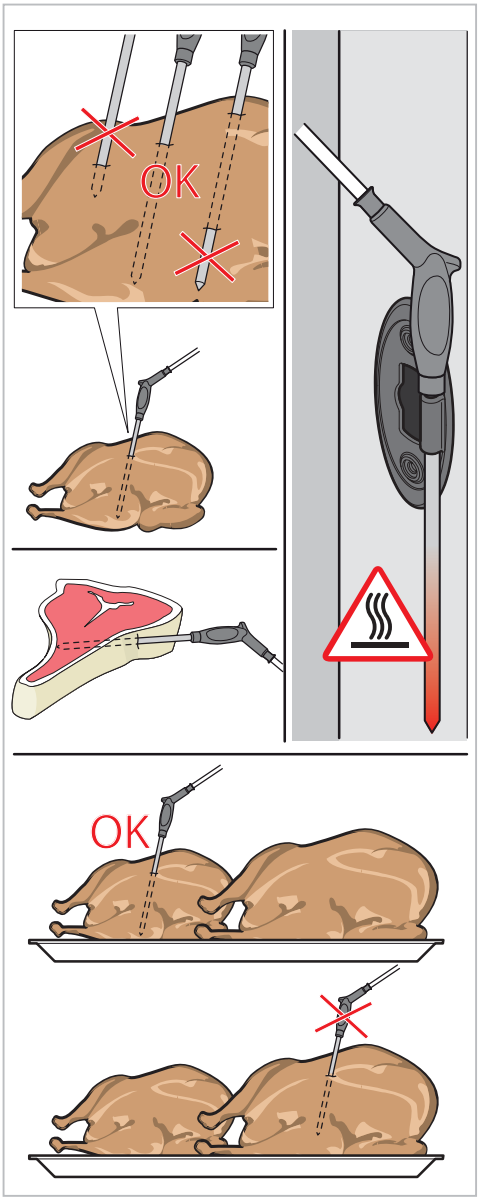

During the cooking cycle, the probe detects the temperature at the "core" of the product: it reaches the temperature set by the user when the product is perfectly cooked both on its surface and innermost portion.
The core probe must be poked deep into the food being cooked; make sure that the probe head reaches the product's "core" - the innermost portion - without piercing its way through. If the food you are cooking is rather thin, insert the probe parallel to the oven tray.

When dealing with several foods, insert the probe into the smallest product; take the product out of the oven once it has reached the target temperature and move the probe to the new smallest piece, thus starting the cycle anew (see chapter ***"setting cooking DURATION (time/ with CORE probe)"*** at page ***53*** .

The target core temperature depends on many variables: nature of the food at hand, its size, etc. The user's experience will allow him to determine the proper value.

*MULTIPOINT PROBE: is a standard built-in feature of "POWER" ovens with code ending in "P" (e.g. XV-C705E**P**); it measures temperature in several points of the needle and the screen output is an average of all values taken.*

SOUS-VIDE PROBE: measures temperature only at the needle tip.

Handle the probe with care because it is extremely sharp and, after use, the needle reaches high temperatures.

Extract the probe from the food's core before taking out the trays from the oven, and set it on its external probe holder (never leave it dangling inside/ outside the oven cavity!).
Before extracting the tray check that the probe cable is not in the way.

“MASTER” ovens, “CONTROLLED” ovens and connected accessories

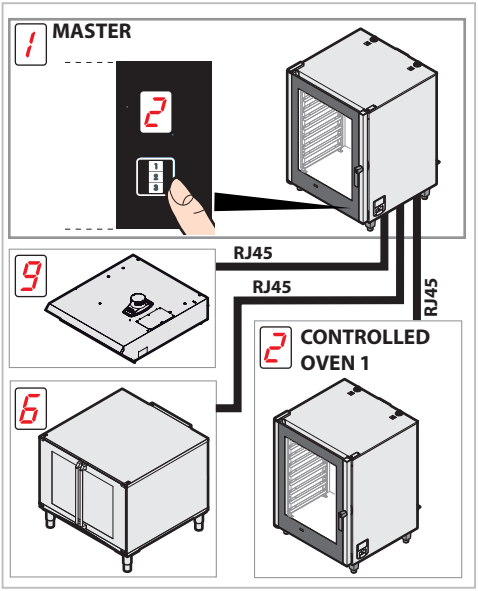

If you own more than one UNOX appliance, we recommend that a specialised technician:
- connect all appliance with an RJ45 cable;
- configure one of the ovens as main unit (MASTER) and all other ovens, up to 3 units, as auxiliary (CONTROLLED).

This makes it possible to manage the interconnected "MASTER" oven, the "CONTROLLED" ovens and all complementary appliances (e.g. provers) simply by acting on the control panel of the "MASTER" oven in lieu of each appliance.

The "MASTER" oven features direct use, while "CONTROLLED" ovens or complementary appliances are engaged by repeatedly pressing the button until the corresponding number appears on the screen (see ***“Table E”***)

Parameter configuration and use of the "CONTROLLED" ovens is the same as for "MASTER" ovens.

Any connected accessories (hoods and reverse osmosis kits) are independently managed by the oven control system that automatically runs these accessories in relation to actual needs.

The control panels of the "CONTROLLED" ovens are idle (non-operational) because they are all controlled by the “MASTER” oven control panel.
Oven status can be changed from "CONTROLLED" to "MASTER" if need be: this operation must only be performed by a specialised technician authorised by UNOX.

Table E

No. appliances	BakerTop™ Range Devices
1	BakerTop™ Oven - MASTER
2	BakerTop™ Oven - CONTROLLED 1
3	BakerTop™ Oven - CONTROLLED 2
4	BakerTop™ Oven - CONTROLLED 3
6	Prover
7	Reverse osmosis system
8	Static oven - Deck oven
9	Hood
10	Ovex.NET

No. appliances	ChefTop™ Range Devices
1	ChefTop™ Oven - MASTER
2	ChefTop™ Oven - CONTROLLED 1
3	ChefTop™ Oven - CONTROLLED 2
4	ChefTop™ Oven - CONTROLLED 3
5	Blast-chiller
6	Temperature maintainer Slow cooking oven
7	Reverse osmosis system
8	Static oven
9	Hood
10	Ovex.NET

COOKING SYSTEM **Pollo** (only for ChefTop™ ovens)

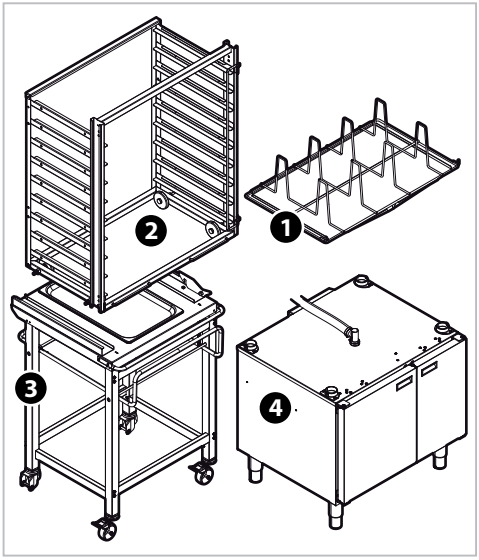

The range of ChefTop™ ovens, thanks to ADAPTIVE.Clima technology and an array of dedicated accessories, makes it possible to cook chicken/fowl with significant savings in time, appliance cleaning and disposal of fats and oils.

❶ **Rack Pollo** (holds 8 chicken)

Thanks to the **Pollo,** rack, the oven cavity space is optimised to allow larger loads: the rack's design cooks every chicken to perfection.

❷ **Rack baskets Pollo** (holds 16 - 24 - 32 - 48 chicken)

❸ **Trolley Pollo**

The trolley complements the **Pollo** rack baskets to make transport to the deli counter much easier.
They come with fat-collecting trays mounted on the top section.

❹ **Cabinets Pollo** (GN 1/1 - GN 2/1)

Special cabinets for chicken, come with:
- drain pipes controlled by a motorised valve for separate cooking-fat collection;
- airtight fat-collection tanks;
- cleaning detergent tank compartment.

Use

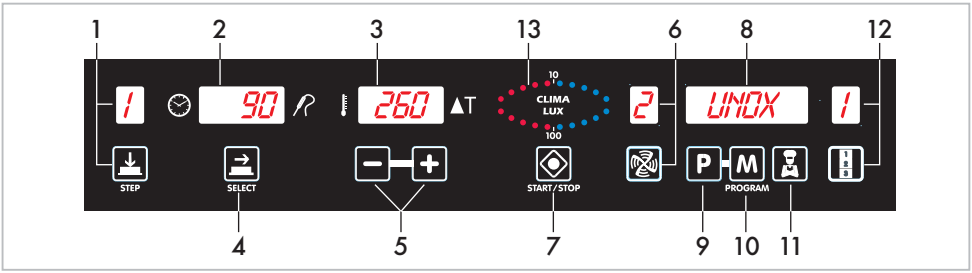

1) Press repeatedly to select the 9 STEPS: the screen displays the STEP in use.
2) The screen displays the time or core prove temperature set.
3) The screen displays the set cavity temperature or Delta "t".
4) Press the button repeatedly to select the parameters to set (temperature, cooking duration, etc...). The active parameter is indicated by the blinking corresponding icon:
   - cooking time shown on screen as hours: minutes
   - core probe temperature shown on screen as °C
   - cavity probe temperature shown on screen as °C
   - temperature Delta "t"(difference between cavity and core probe temperatures) shown on screen as °C
5) Increases/decreases values shown on screen.
6) Sets the airflow speed shown on screen.
7) Switches on the appliances, starts/stops the cooking cycle.
   The lit icon means that the oven is on.
8) Programming screen.
9) Programming button (for details see page ***57***)
10) Saves set programs.
11) Programming button (for details see page ***57***)
12) MAXI.Link - Controls the ovens and complementary appliances connected to the ovens: the screen shows the number of appliances in use.
13) CLIMA.Lux - Repeatedly pressing the left/right buttons controls steam input (STEAM.Plus™) or humidity extraction from the cavity (DRY.Plus™).

The control panels are used by pressing the screen-printed keypad.
Press only with fingers and no other objects, such as knives, forks, etc...
This technology makes cleaning the control panel quick and easy, while guaranteeing maximum reliability and durability and avoiding any type of mechanical shifting.

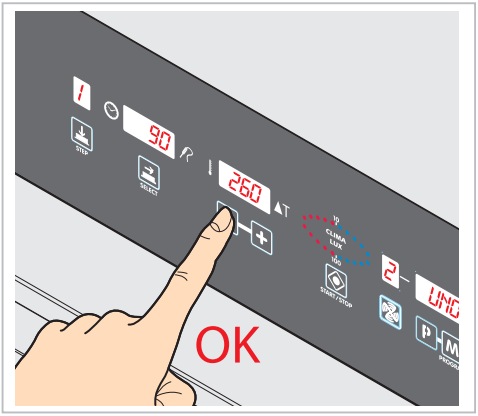

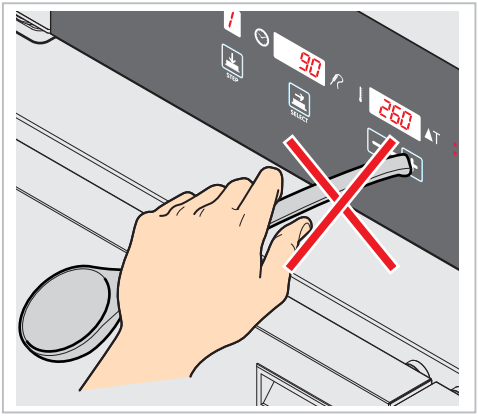

Basic notions

The appliances can be used in **MANUAL** or **PROGRAMMED** mode.

The **MANUAL** mode implies that the following parameters for each cooking cycle are set by the user:
- cooking time or core temperature by means of core probe (the two parameters reciprocally exclude each other);
- oven cavity temperature or Delta "t" (Delta "t" can be set only if the core probe is used);
- CLIMA.Lux (percentage of oven cavity steam input/release - STEAM.Plus™ - DRY.Plus™);
- airflow speed.

The parameters set are not saved and must be entered during each successive use.

PROGRAMMED mode makes it possible to:
- save, with a user given name (up to 25 letters), up to 99 cooking cycles (programmes) for use in successive cooking sessions;
- use special functions (cleaning, "COOL", etc.);
- use pre-set cooking programmes.

Each cooking cycle comprises **10** steps:
- **STEP 1**: initial preheating (only for programmed mode);
- **STEPS 2 ...10**: up to 9 cooking steps, each characterized by different cooking parameters. Cooking does not necessarily require all nine STEPS: set only those required.

The appliance automatically passes from one cooking phase to the next.

Ex. COOKING CYCLE

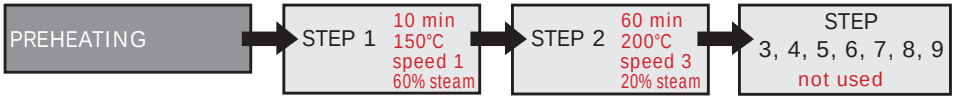

- When the oven is connected to the power supply, the control panel switches on automatically.
- Button functions [−] [+]:
  single repeated pressing -> increases/decreases the value one unit at a time;
  held down -> increases/decreases the value rapidly.
- If no button is pressed within 15 minutes and there is no operating appliance connected to the control panel of the same oven (e.g. prover), the electronic controls go into stand-by mode: only the start/stop LED REMAINS LIT. Simply press the START/STOP button to reactivate the electronic controls.

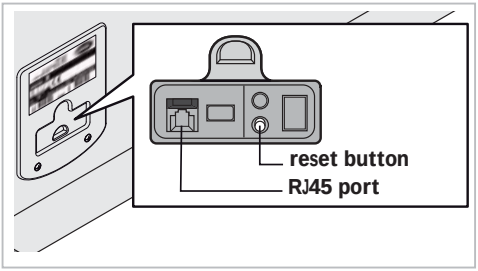

A reset button and an RJ45 port for servicing are series features equipped on the right hand side of the oven.

A user interface kit is available at request: contact UNOX for additional information.

If the oven's sound signal is too low, UNOX recommends installing its Buzzer kit to increase the volume; the kit can be installed at any moment by a specialised technician.

MANUAL mode

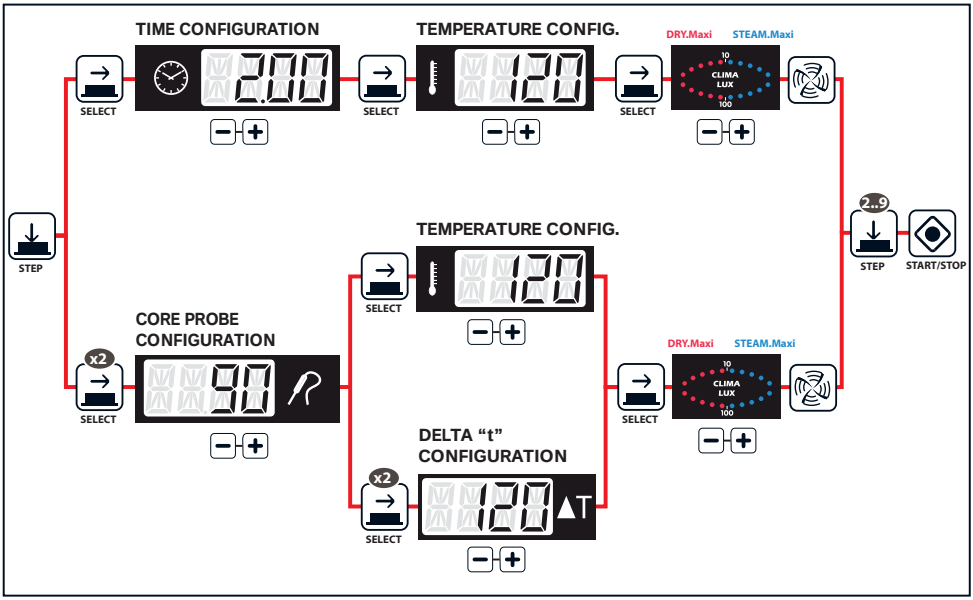

Pressing the button moves from one STEP to the next; the current STEP is shown on the screen "1".

Pressing the button moves from one configuration parameter to the next; the parameter in use is displayed by blinking icons, the set values are shown on their relative screens.

- cooking time shown on screen as hours: minutes
- core probe temperature shown on screen as °C
- cavity probe temperature shown on screen as °C
- temperature Delta "t"(difference between cavity and core probe temperatures) shown on screen as °C

The parameters displayed depend on the choices you make (for example, the Delta "t" function cannot be used for cooking if STEP duration was set in relation to time instead of using the core probe).

PREHEATING

Preheating cannot be set in MANUAL mode.

STEP SELECTION

❶ Press the button ;

❷ the number of the STEP in use appears on screen "1" (up to a maximum of 9 STEPS).

SETTING COOKING DURATION (TIME/ WITH CORE PROBE)

Cooking duration can be set by establishing:
- cooking TIME (e.g. 1:30min.) or
- the CORE TEMPERATURE measured by the probe (e.g. 80°C).

The two values reciprocally exclude each other: selecting the time in the same STEP excludes the core temperature parameter and vice-versa. The following can be set for a multi-STEP cooking process:
- *all STEPS with TIME parameters;*
- *a single STEP managed by the CORE TEMPERATURE, with the ability to repeat it again (see point ❸)*
- *starting STEPS with TIME parameters + last STEP (which can be repeated) controlled by CORE TEMPERATURE P.*

❶ Press the button repeatedly until:
blinks to set the TIME
blinks to set the CORE TEMPERATURE measured by the probe.

-> the parameter is active and can be adjusted only when the icon blinks.

❷ Set the desired value (time or core temperature) pressing the buttons.
The input values are shown on screen as hours. minutes (time setting) or (probe setting).

time configuration

probe configuration

❸ COOKING CYCLE SET IN RELATION TO CORE TEMPERATURE MEASURED BY THE PROBE:
poke the probe into the smallest product (for more information, see chapter ***"Core probe positioning"*** at page ***47.***
The oven stops its cooking cycle and issues a sound signal when reaching the set core temperature.
If you must re-start cooking, do as follows within 40 seconds of the sound signal:
- open the door;
- extract the probe from the cooked "pilot" product;
- take out all products similar in size to the "pilot" from the oven, which are surely ready;
- insert the probe into the smallest remaining product;
- close the door and press the button: the oven will propose the same previous core temperature. Use the buttons to make adjustments;
- re.start cooking by pressing the button.

❹ TIME DEPENDANT COOKING STEP:
the STEP ends when the time set has elapsed, automatically moving on to the next step (if set).

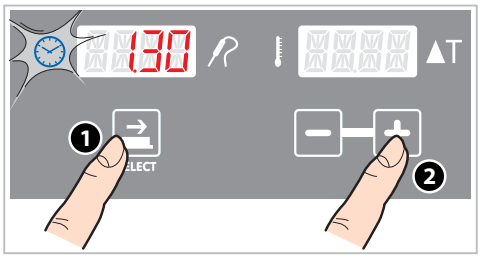

"INF"/"HOLD" ← 0.00 → 9.59

CONTINUOUS OPERATION — MINIMUM DURATION — MAXIMUM DURATION

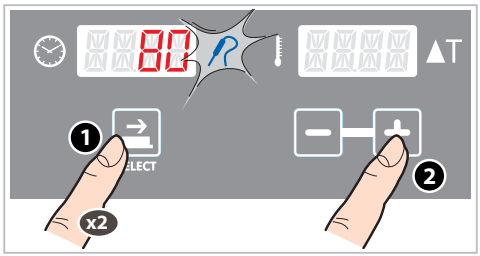

0°C ← 0.00 → 100°C

"INF"/"HOLD" (Continuous mode)
The oven is in continuous mode until the user manually intervenes:
STEP 1 -> set the parameter on "INF" (infinite).
The temperature depends on the parameter set with the dedicated parameter (see next section).
STEP 2...9 -> set the "HLD" (HOLD) parameter.
The temperature is maintained at 70°C and cannot be modified.

SETTING THE COOKING TEMPERATURE OF DELTA "T"

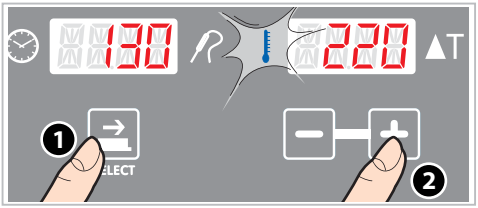

"PAU" — OVEN PAUSED AND FANS/RESISTORS OFF

0°C — MINIMUM TEMPERATURE

260°C — MINIMUM TEMPERATURE

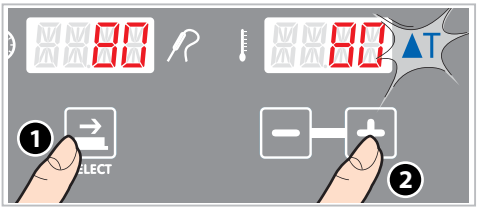

0°C OFF — 0°C — 120°C

Cooking temperature can be set by establishing:
- an oven cavity TEMPERATURE (e.g. 220°C) or
- by using the DELTA "t" function (only if using the core probe).

The two values exclude each other: Delta "t" will be excluded if selecting the oven cavity parameter and vice-versa.

❶ Press the button repeatedly until:

blinks to set the OVEN CAVITY TEMPERATURE

ΔT blinks to set the value of the DELTA "t" function.

-> the parameter is active and can be adjusted only when the icon blinks.

❷ Set the desired value by pressing the buttons.
The input values are shown on screen as°C.

220 ΔT temperature config.

80 ΔT config. Delta "t"

Delta "t" mode

Oven cavity temperature –
Temperature measured by the core probe =
Delta "t" value to set

Start-up delay

To obtain an oven start-up delay or to pause the oven for a certain time (useful for leavening) set "PAU" (PAUSE) on the "cooking temperature" parameter and the pause duration with the time dependent "cooking duration" parameter (see previous section).

SETTING CLIMA LUX™ (DRY.Maxi™ and STEAM.Maxi™)

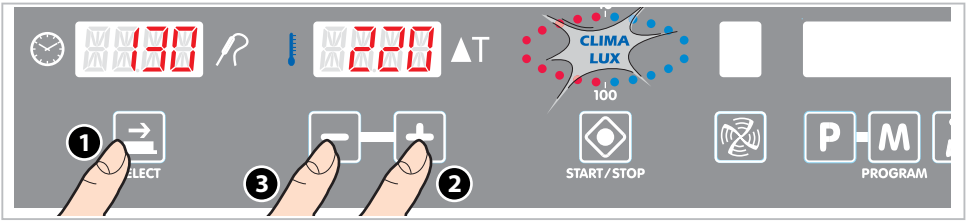

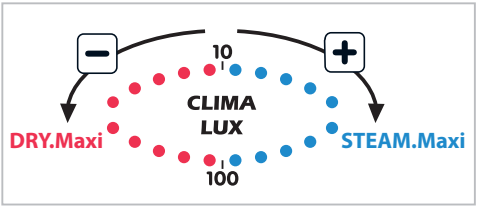

DRY.Maxi™

The patented DRY.Maxi™ technology makes it possible to quickly extract all the humidity from the oven cavity, whether it was released by the products in the oven or generated by the STEAM.Maxi™ system in a previous cooking step.

STEAM.Maxi™

The patented STEAM.Maxi™ technology generate steam inside the oven cavity at a starting temperature of 48°C.
STEAM.Maxi™ introduces adjustable amounts of steam in conjunction with various temperatures, allowing different types of cooking to take place:
- *Steaming (only steam);*
- *Mixed convection – steam (air + steam) cooking.*

While cooking, the product naturally releases a certain percentage of humidity: no steam will be produced by the oven if the percentage matches the value set by the user.

The oven cavity internal climate setting is indicated by the CLIMA LUX™ ellipse and is set using the [−] [+] buttons.

The 10 BLUE LEDs indicate the percentage of target humidity inside the oven cavity (STEAM.maxi).

The 10 RED LEDs indicate the drying percentage inside the oven cavity (STEAM Maxi).

The two systems cannot be used together. Setting the parameter is optional, if left unset, the oven resorts to convection cooking.

❶ Repeatedly press the [→] button until the "CLIMA LUX™" message blinks-> **the parameter is active and can be set only if the message blinks.**

❷ To INPUT steam into the oven cavity (STEAM.maxi) press the [+] button repeatedly until setting the desired humidity (BLUE LEDs - from 10% to 100%). The oven automatically engages steam cooking mode for cooking temperatures below 130° and with a 100% humidity.

❸ To RELEASE steam from the oven cavity (DRY. maxi) press the [−] button repeatedly until setting the desired humidity (RED LEDs - from 10% to 100%).

SETTING THE AIRFLOW SPEEDS (AIR.Maxi)

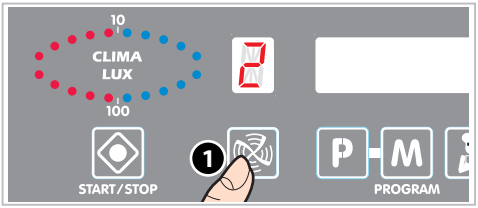

Pulsed mode

The pulsed mode switches off the motor as well as the resistors when the set temperature has been reached. The fan rotation direction is reversed each time the motor is switched on.

The motor rotation speed and their work modes can be set by pressing the button (with(out) reverse rotation). Speed 6 is the default value when the button is first pressed, while repeated pressing sets the speed to 5, 4, 3, 2, 1 and P.

The set speed appears on screen "6":

- speed 1 - 750 rpm. WITHOUT INVERSION
- speed 2 - 1000 rpm. WITHOUT INVERSION
- speed 3 - 1400 rpm. WITHOUT INVERSION
- speed 4 - 1400 rpm. WITH INVERSION
- speed 5 - 2000 rpm. WITH INVERSION
- speed 6 - 2700 rpm. WITH INVERSION
- speed P - 1000 rpm. PULSED

SELECTING AND SETTING THE NEXT STEPS (OPTIONAL)

The appliance automatically passes from one STEP to the next.

Cooking does not necessarily require all nine STEPS available: set only those required.
To set step 2:

❶ press the button;

❷ the number "2" APPEARS ON SCREEN.

Set the various parameters (duration, temperature, etc...) as described in the previous sections. If necessary, select and set the following STEPS in the same manner.

COOKING START/STOP/REPEAT - OVEN SHUT-DOWN

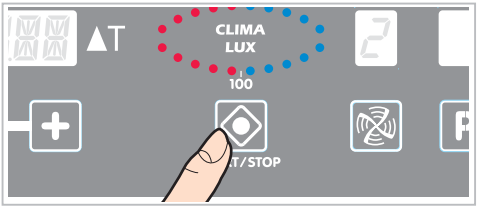

Press and hold the START/STOP button for 2/3 seconds to interrupt the cooking cycle in advance.

Having set the STEPS desired:

❶ If using a cooking cycle that requires a core probe, poke it into the product to cook; press the START/STOP button to start the cooking cycle.

❷ The sound emits a sound signal for 15 seconds and the display blinks for about 45 seconds after the oven ends its cooking cycle.
If at this time the following buttons are pressed:
-> the oven starts-up again using the same parameters as the previous cooking cycle;
START/STOP -> the oven switches-off and the cooking parameters are deleted.

PROGRAMMED Mode

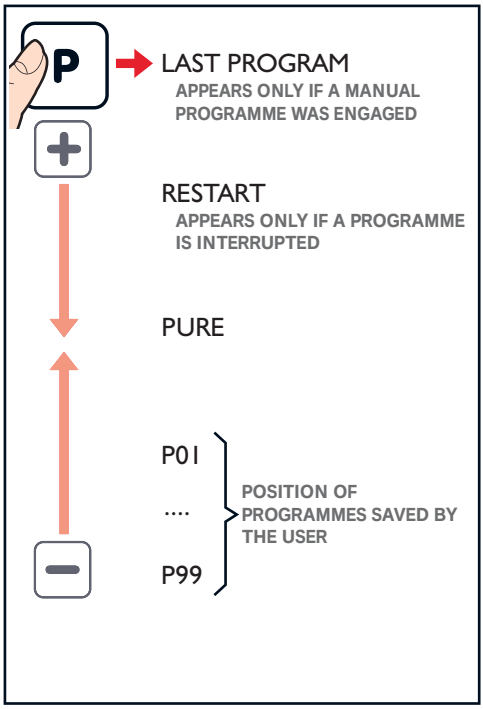

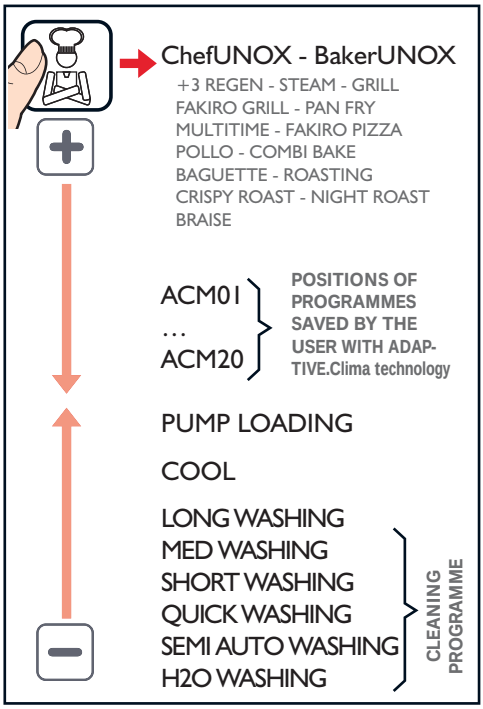

LAST PROGRAM (REPEATS A PREVIOUS COOKING CYCLE)

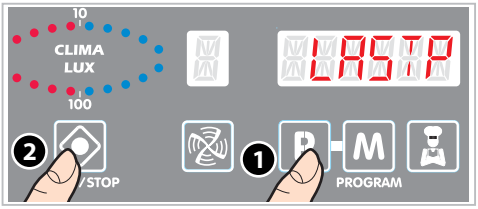

This function fully repeats the last cooking cycle performed (only if performed in programmed mode).

1. At the end of the executed cooking cycle, press the P button -> the message LAST PROGRAM appears on screen "8".
2. Press the START/STOP button -> the last cycle executed starts.

RESTART (RESUMES AN INTERRUPTED COOKING PROCESS)

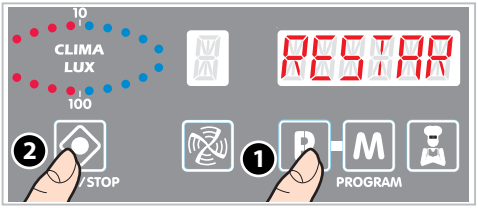

If a cooking programme was interrupted in advance (executed booth in manual and programmed modes) this function resumes it from the precise stop point while maintaining the same parameters set.

1. Press the P button until screen “8” displays the message RESTART.
2. Press the START/STOP button: the last cooking cycle executed resume.

PURE (WATER FILTERING SYSTEM SETTINGS)

The PURE function accesses a hidden menu from which can be set the water softener filtering system (Reverse osmosis kit with “Unox.PURE-RO” pump or “Unox. PURE” filters).

❶ Press the P button repeatedly until screen “8” displays the message PURE.

❷ The message "END" appears on screen.

❸ Press the + button, the message "PIN" appears:

❹ Press the + button, the message "HDR" appears.

❺ Pressing → when the screen displays a parameter (END, PIN or HDR) allows you to adjust it. After accessing a parameter, press → or wait 5 seconds to return to the previous screen.

END

The residual litres are displayed before requiring filter replacement. The number of litres are only displayed and cannot be adjusted.
When the number of remaining litres is zero, the screen displays the warning message "WPURE".

When this warning is displayed:

A) the filter is replaced and the new PIN on the package is entered to activate litre count;
B) an incorrect PIN is entered: this deactivates litre countdown.

PIN

Use the − + buttons to write the PIN code of the filter (shown on its package) to activate the litre count. Hold down the M button to save the code. Entering an incorrect PIN calls up the "ERROR" message and the litre count is deactivated.

P01->P99 (COOKING PROGRAMME SAVE)

Access to the program menu

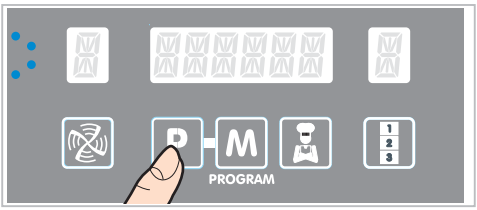

Access the programming menu by pressing the P button .

Assigning program position

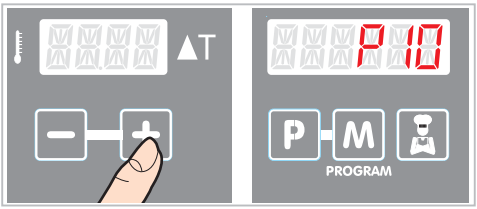

Pressing the − + buttons repeatedly selects from positions P01 to P99 for programme storage.

The selected position is visualized on screen "8".

Assigning a name to a programme

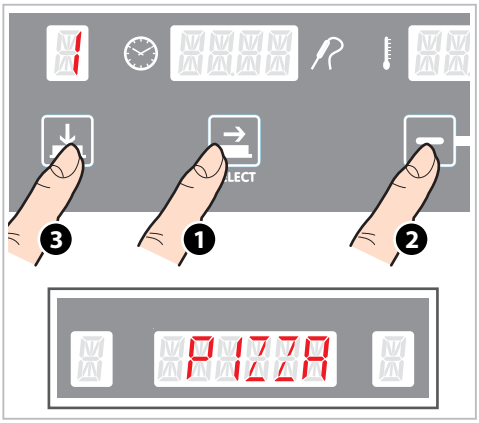

❶ Press .

❷ Use the buttons to input the 1st letter of the programme name. Press again and use the buttons to select the 2nd letter. Repeat the same operation for all successive letters (up to a maximum of 25 letters).

❸ To end letter input, press the button and check the name entered:

if correct, press the button to access the cooking parameters settings;

in incorrect, press the button to correctly input the letters.

Setting cooking parameters of a program

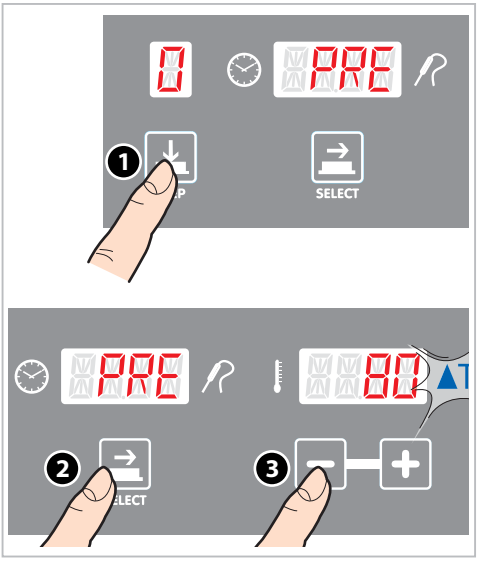

PREHEATING

❶ Press the button repeatedly until the number"0" appears on screen "1" and the message "PRE" on screen "2".

❷ Pressing the button repeatedly select whether to set preheating in relation to:

the CAVITY TEMPERATURE

the function DELTA "t" (difference between preheating temperature and that of the 1st cooking STEP)

-> only when the icon blinks is the parameter active and adjustable.

❸ Press the buttons to set the target value.

DURATION, TEMPERATURE. CLIMATE, FAN SPEED
Set the following program parameters as fully explained in the chapter "Manual Operation".

Saving the set program

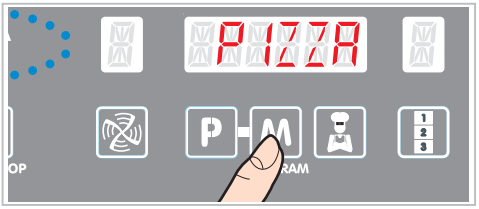

Hold the M button until hearing the long "beep" sound.
The program has now been saved.

RECALLING AND STARTING A SAVED PROGRAM

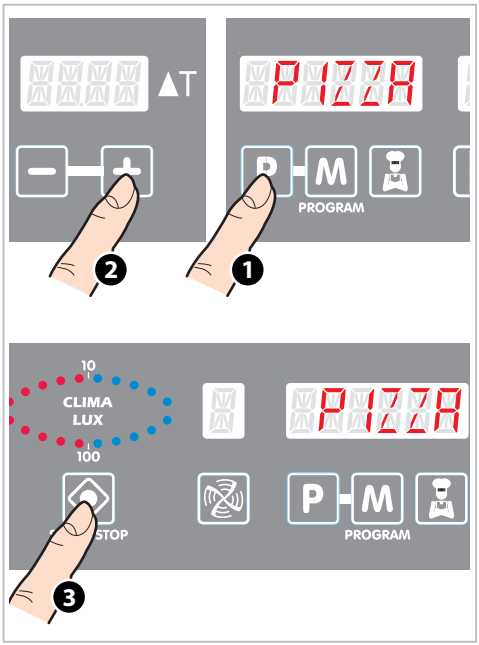

❶ Press the **P** button.

❷ press the **−** **+** buttons until the target program appears on screen "8".

❸ start it by pressing the START/STOP button.

The oven beeps to signal cooking phase end.

Press the START/STOP button for 2/3 seconds to interrupt the cooking cycle in advance.

When a saved cooking program is started, the oven preheats automatically to the set preheating temperature. Once preheating is over, the oven emits a sound signal and the screen displays the values for the 1st cooking STEP.
The cooking programme starts automatically after putting the food into the oven and closing the door.

MODIFYING THE PARAMETERS OF A SET PROGRAM

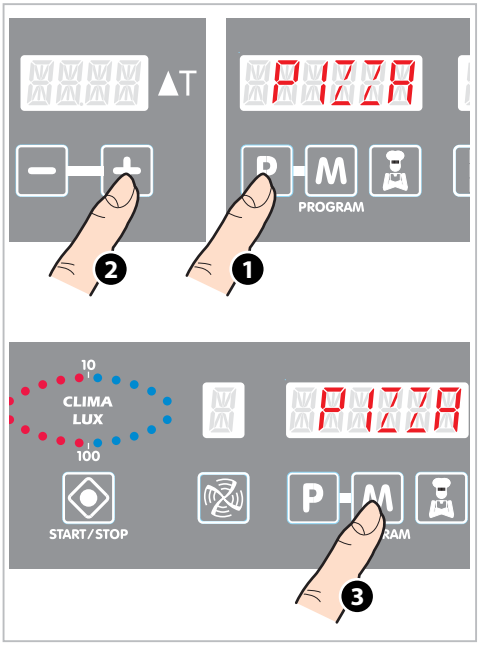

❶ Press the **P** button .

❷ Use **−** **+** buttons to call to screen the program to modify.

❸ Set the program parameters as fully explained in the chapter “Manual Operation".

❹ Hold the **M** button until hearing the long "beep" sound. Now the modified parameters have been saved.

ChefUnox - BakerUnox (PRESET AUTOMATIC PROGRAMMES)

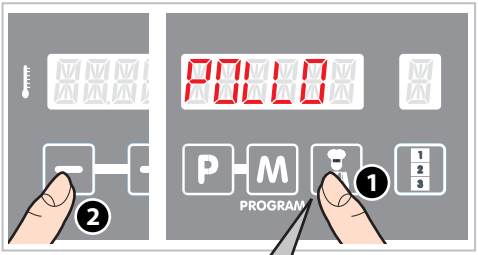

+3 REGEN	(only ChefUnox)
STEAM	(only ChefUnox)
GRILL FAKIRO	(only ChefUnox)
GRILL	(only ChefUnox)
PAN FRY	(only ChefUnox)
MULTITIME	(only ChefUnox)
FAKIRO PIZZA	
Pollo ®	(only ChefUnox)
BLACK BAKE	
BAGUETTE	(only BackerUnox)
ROASTING	(only ChefUnox)
CRISPY ROAST	(only ChefUnox)
NIGHT ROAST	(only ChefUnox)
BRAISE	(only ChefUnox)

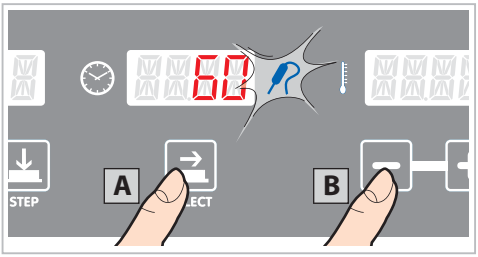

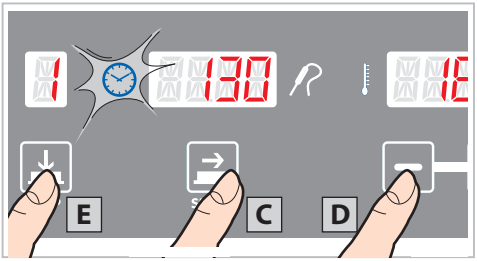

The oven comes with a library of preset automatic programmes for cooking specific foods (see table on following page).
Select the various programmes to cook an endless variety of foods: several programmes allow adjustment of different parameters to satisfy personal tastes.

❶ Press the button.

❷ Use the button to select the desired programme.

❸ Follow the instructions below if the selected programme allows parameter adjustment.

ADJUSTING THE CORE TEMPERATURE / TIME

A press the button until to parameter to adjust blinks;

B set the new target value pressing the buttons; next move on to point ❹ of the following page.

SETTING THE TIME ON 9 TIMERS

The preset STEAM, GRILL, FAKIRO GRILL, PAN FRY and MULTITIME programmes run the oven in continuous mode: this makes it possible to load different types of products that require different cooking times at any moment, and manage their preparation using 9 different timers. The function automatically updates the cooking times each time the door is opened.

C Press the button until the clock icon blinks.

D Set the time on the first timer using the buttons.

E Press the button followed by the button: set the time on the second timer using the buttons and so on; next move on to point ❹ of the following page.

TEMPERATURE ADJUSTMENT - CLIMALUX - FAN SPEED

F Press the button until the temperature icon blinks.

G Set preheating temperature using the buttons.

H Press the button until the "ClimaLux" message appears.

I Set the desired values (STEAM.plus or DRY.plus) using the buttons.

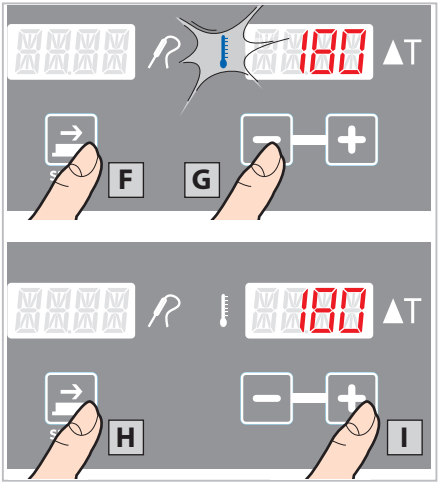

❹ If you want the adjustments to be:

- permanently saved into the selected programme ->press the M button for 5 seconds (save confirmation is with a sound signal);
- performed only for this cycle of cooking -> go to point ❺.

❺ Start the programme by reading the detailed instructions:

MULTITIME

Press the START/STOP button-> preheating at the previously set temperature starts.
The oven emits a sound signal when it reaches the target temperature and the oven cavity light starts to blink. Open the door, load the food and shut the door: cooking starts with indefinite time duration and with temperature, CLIMA LUX and fan speed parameters previously set. When time has elapsed on the first timer, the oven emits a sound signal and the oven cavity light blinks: open the door and remove the cooked food.
Shut the door: cooking continues. When time has elapsed on the second timer, the oven emits another sound signal and so on.

+3 REGEN, FAKIRO PIZZA, POLLO, BLACK BAKE, BAGUETTE, ROASTING, CRISPY/ NIGHT ROASTING, BRAISE

Whenever the Fakiro Pizza programme is used, remember to preheat the tray for at least 5 minutes at a temperature exceeding 230°C.

Open the door, load the food, shut the door and press the button -> the selected programme starts.

STEAM, GRILL, FAKIRO GRILL, PAN FRY

Whenever the Fakiro Grill programme is used, remember to preheat the tray for at least 5 minutes at a temperature exceeding 230°C.

Open the door, load the food, shut the door and press the button ->the selected programme starts. When time has elapsed on the first timer, the oven emits a sound signal and the oven cavity light blinks: open the door and remove the cooked food.
Shut the door: cooking continues. When time has elapsed on the second timer, the oven emits another sound signal and so on.

To interrupt programme execution in advance (for all programmes) press the START/STOP button.

PROGRAMMES	COOKING...	Cooking/Baking ESSENTIAL advised	PARAMETERS ADJUSTABLE	NOTE
ChefTop™ +3 REGEN	Regeneration from 3°C	-	Core probe temperature (preset: 65°C	
ChefTop™ STEAM	Steamed vegetables, hard-boiled eggs, steamed rice...	No Fry	Setting times on timers 1 to 9	
ChefTop™ GRILL	Vegetables, meat and fish from cold grill	Grill	Setting times on timers 1 to 9	
ChefTop™ FAKIRO GRILL	Vegetables, meat and fish preheating the grill in oven	FAKIRO Grill	Setting times on timers 1 to 9	Preheat the tray for at least 5 minutes at a temperature above 230°C.
ChefTop™ PAN FRY	Vegetables, meat, pan-fried fish, bread coated foods	Pan Fry	Setting times on timers 1 to 9	
ChefTop™ MULTITIME	Several products requiring different cooking times (simultaneous cooking)	-	Setting time on timers 1 to 9 Temperature, CLIMA LUX, fan speed	
ChefTop™ BakerTop™ FAKIRO PIZZA	Pizza and focaccia bread	FAKIRO	Cooking time	Preheat the tray for at least 5 minutes at a temperature above 230°C.
ChefTop™ Pollo ®	Chicken, fowl, game	Chicken	Cooking time (preset: 15 min)	
ChefTop™ BakerTop™ BLACK BAKE	Baked goods	Black Bake	Cooking time (preset: 5 min)	
BakerTop™ BAGUETTE	Baguette and similar bread	Baguette	Cooking time (preset: 15 min)	
ChefTop™ ROASTING	Roast meat	Black.20	none	
ChefTop™ CRISPY ROAST	Roast meat with crust	Black.20	none	
ChefTop™ NIGHT ROAST	Roast meat (overnight)	Black.20	Core probe temperature (preset: 54°C	
ChefTop™ BRAISE	Braising and stewing meats	Black.20	none	

use of the core probe is COMPULSORY with this programme

use of the core probe is OPTIONAL with this programme

ACM01->ACM20 (SAVING COOKING PROGRAMMES WITH ADAPTIVE.CLIMA)

This technology allows the oven to constantly control all cooking parameters (temperature, real humidity level in the cavity, etc.).
Therefore, the oven is able to recognise the amount of food loaded into it and consequentially adjusts the parameters of the programme selected in function of the actual load.
For example, given that each product releases steam naturally, the amount of steam input into the cavity (STEAM.Maxi) varies in relation to oven load (larger the load -> less steam produced by the oven).
The ADAPTIVE.Clima technology makes it possible to save cooking cycles performed, including the effects of any manual adjustments made by the user (e.g. opening the oven door).

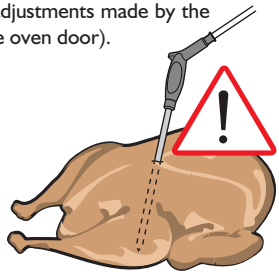

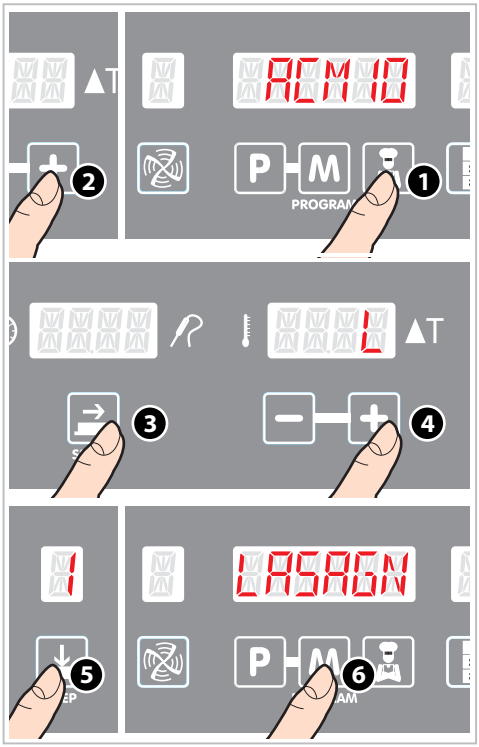

SAVING COOKING CYCLES

A Carry out a "PILOT" programmed or manual cooking cycle, setting the most adequate parameters for the products at issue.
Remember to insert the probe into the food's core even if not required by parameters set;

(for more details see chapter ***"PROGRAMMED Mode"*** at page ***57*** or chapter ***"MANUAL mode"*** at page ***52***).

B Check the results of the "PILOT" cooking cycle when cycle is complete:
IMPERFECT RESULTS-> DO NOT save the programme, repeat after adjusting cooking parameters until obtaining desired result.
PERFECT RESULT-> save usingADAPTIVE.Clima technology, see point **C**.

C Saving procedure:

❶ press the button;

❷ repeatedly press the button until the screen displays the number of the memory (from ACM01 to ACM20) on which the "pilot" cooking process will be saved;

❸ press the button;

❹ use the buttons to select the 1st letter of the name assigned; press the same buttons again to select the 2nd letter; repeat for all successive letters;

❺ after entering the name, press the button;

❻ press and hold the **M** button for 5 seconds to store the program in the memory (after 5 seconds a confirmation beep will sound).

It is not possible to modify any parameters of a stored ADAPTIVE. Clima programme.

ACCESSING SAVED PROGRAMMES

❶ press the button;

❷ select the ADAPTIVE.Clima programme desired by repeatedly pressing the buttons;

❸ start the programme by pressing the START/STOP button.

COOL (OVEN CAVITY COOLING FUNCTION)

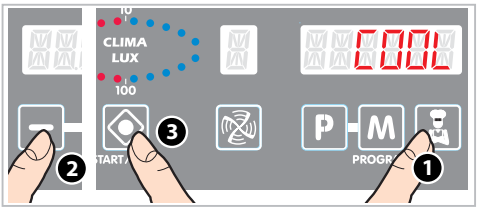

During "COOL" mode (oven cavity cooling) the appliance also functions while the door is open. Do not remove or touch the protective fan casing, the fans and the heating elements while the appliance is on and until complete cooling.

When the temperature drops below 50 °C, stop the "COOL" function and switch it back on only if, after two minutes off, the cavity temperature rises above 50 °C.

The "COOL" function cools the oven cavity only by running the fans.
The function can also be engaged while the door is open to speed cooling.
The oven cavity temperature is displayed for the entire cooling duration.

❶ Access the programming menu by pressing the button .

❷ Press the button until "COOL" appears on screen 8.

❸ Press the button to start the "COOL" function.

❹ Press the button again to stop the "COOL" function.

WASHING (WASHING PROGRAMMES) AND PUMP LOADING (LOADING DETERGENTS)

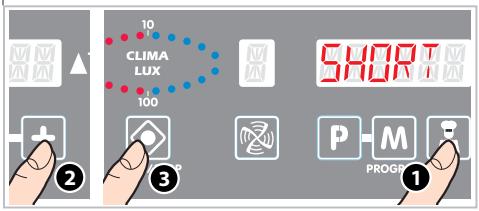

Rotor. KLEAN™ technology automatically/semi-automatically cleans the oven cavity by running pre-established programmes that cannot be adjusted (see also chapter ***"CLEANING WITH ROTOR.KLEAN®"*** at page ***73***)

❶ Access the programming menu by pressing the button.

❷ Press the buttons until screen "8"displays:

A) the message "PUMP LOADING": this program must be engaged only after first oven use or after every detergent tank replacement; it lasts about 25 seconds and it loads the detergent from the tank while suction tube. **After pump loading, you MUST promptly start a washing cycle (SHORT/MED/LONG/H2O WASHING) see point B).**

B) the list of available washing programmes:
- LONG WASHING
- MED WASHING
- SHORT WASHING
- QUICK WASHING
- SEMI-AUTO WASHING (only for maintenance technicians)
- H2O WASHING.

Consult the list on the following page for more information on these programmes.

❸ Press the button to start the desired programme (PUMP LOADING or WASHING).

Do not open the oven door during cleaning to avoid risks of injuries caused by fan movement, hot steam and aggressive action of chemical detergents used.

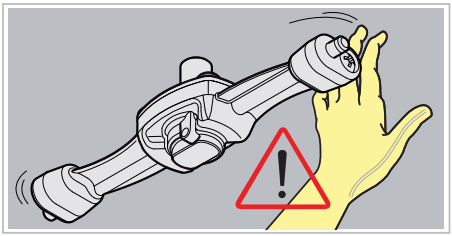

❹ The washing programme is interrupted:

A) at the end of the time listed in the table (non-adjustable).

B) in advance by pressing **->**
indefinite override of the current washing program; the H2O WASHING programme starts automatically and cannot be stopped (6 minute duration). If there is a power failure while the H20 WASHING programme is running, the programme resumes from its interrupted point as soon as power is restored;

C) when the power supply to the appliance is down->
the current washing programme is momentarily interrupted; the programme automatically picks up from the point where it left off when power is restored.

If power failure occurs during particular washing moments, the message "AF09" may appear on screen when power is restored and the current washing programme is interrupted indefinitely.
In this case:
- eliminate the display message by cutting and restoring power to the appliance;
- manually reset the washing programme that will start over.

D) when the appliance has no water supply->

the alarm message "AF09" appears on screen and the current washing programme is interrupted indefinitely.
In this case:
- eliminate the display message by cutting and restoring power to the appliance;
- check the reason for water failure (e.g. cut-off valve closed) and resolve if possible:

water supply newly available: **you must start a new washing programme (QUICK/SHORT/MED/LONG/H2O WASHING)**, then use the oven as usual.

water supply still unavailable: the oven can still be used while waiting for the water supply (do not use the WASHING and STEAM.Maxi functions inside the cavity). Prior to every use, the oven cavity **MUST** thoroughly be washed several times to completely remove any traces of residual detergent. **The detergent comprises an extremely aggressive chemical substance; therefore, be extremely careful during manual washing and wear adequate personal protective equipment (gloves, glasses, etc.).**

Programmes	Time *	Description
QUICK WASHING	30 min	quick hot washing automatic rinsing automatic drying
SHORT WASHING	39 min	short hot washing automatic rinsing automatic drying
MED WASHING	58 min.	medium hot washing automatic rinsing automatic drying
LONG WASHING	1 hour and 16 min.	long hot washing automatic rinsing automatic drying
H2O WASHING	6 min.	cold water washing automatic drying
** SEMI-AUTO WASHING	10 min. + 18 min.	manual spray cleaner automatic rinsing automatic drying
PUMP LOADING	25 sec.	for loading detergent

** If the oven cavity temperature is:*
- ***below 70°C*** *-> the washing programme selected starts immediately and lasts the amount of time listed in the table;*
- ***over 70°C*** *-> a oven cavity cooling procedure starts automatically (the message "INF" appears on screen).*
  The duration of the procedure varies (it depends on cavity temperature at cooling start).
  The washing programme selected starts thereafter and lasts the time listed in the table.

***** SEMI-AUTO WASHING (only for maintenance technicians)***
If the oven cavity is particularly dirty, it is best to run this programme before washing (QUICK/SHORT/MED/LONG WASHING).
① *The oven cavity is heated a few minutes when the programme is engaged.*
② *Open the oven door when a sound signal is emitted and, while wearing personal protective equipment (e.g. gloves, etc...) manually spray the UNOX spray cleaner inside the oven cavity.*
③ *Shut the door again.*
④ *The oven remains in standby for 10 minutes to allow the cleaner to act.*
⑤ *After this time has elapsed, rinsing and drying cycles start automatically, and last 18 minutes.*

Oven-user interface

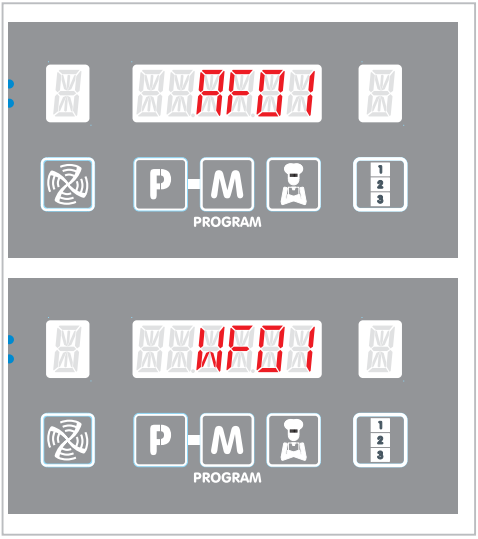

The ovens show any alarm/warning messages regarding the oven or installed peripherals (provers or hoods) on their display screens.

- The warning messages (**WARNING**) signal malfunctions that nevertheless allow the appliance and peripherals to operate, though with a restricted set of functions.

  Pressing button **P** clears the Warning list from THE SCREEN.

- The alarm messages (**ALARM**) identify situations that fail to allow any appliance/peripheral operation whatsoever, and therefore must be put into STOP mode. If the alarm messages strictly refer to the peripherals (e.g. provers, hoods, etc.), the oven can still be used.

When there are several ALARM/WARNING MESSAGES, the user can scroll through these by repeatedly pressing START/STOP.

Display	Description	Effect	Troubleshooting
AF - OVEN ALARMS			
AF01	Motor thermal alarm	The oven stops any operating mode and blocks any screen display configuration	Contact the Customer Assistance Service
AF02	Safety thermostat alarm		
AF03	Oven cavity alarm		
AF04	Communications failure alarm		
AF05	Communications failure with gas board		
AF06	Fume temperature in gas oven alarm		
AF08	Motor tachometer		
AF09	No/little water supply during wash	The oven stops any operating mode and blocks any screen display configuration. Turn the oven's power on and off to override the alarm and use the appliance (without use of washing).	Check the plumbing. Once the water supply has been restored, cut and restore power to the oven and **promptly start a washing cycle.**
AF010	Incorrect CRC alarm in EEPROM for essential parameters	The oven stops any operating mode and blocks any screen display configuration	Contact the Customer Assistance Service
AF011	No 230 V power supply to the gas board		
AF012	No 230 V power supply to the chicken cabinet		

Display	Description	Effect	Troubleshooting
WF - OVEN ALARM			
WF01	Warning: cavity 1 probe	The oven continues to run using the cavity 2 probe, therefore temperature adjustments may be less accurate	Contact the Customer Assistance Service
WF02	Warning: cavity 2 probe	The oven continues to run using the cavity 1 probe, therefore temperature adjustments may be less accurate	
WF03	Warning: core probe	The oven continues to run but the core probe cannot be used for cooking cycles	
WF04	Warning motor tachometer: alarm AF08 may be triggered after this warning	The oven continues to run, no longer stopping when the door is opened and when put in reverse	
WF05	Error: cooling fan	The oven continues to run but proper internal component cooling is no longer ensured.	
WF06	Warning: gas temperature board	The oven continues to run	
WF08	Warning of Gas or Electric oven setting	The oven continues to run but is managed as an electric oven	
WF10	Warning: EEPROM memory indispensable parameters	The oven continues to run (with several limits based on the proper parameter)	
WF11	Warning: gas temperature board	The oven continues to run	
WF12	Warning: thermocouple temperature board	The oven continues to run	
WF13	Warning: vacuum probe	The oven continues to run but the external vacuum probe cannot be used	
WF15	Warning: communication failure with thermocouple board	The oven continues to run but the external vacuum probe cannot be used	
WF17	Warning: multipoint probe on 1 or more measuring points	The oven continues to run but the core temperature measurement may be inaccurate	
WF18	Warning: chicken valve in liquid setting, but no mechanical limit detected	The drain valve may not reverse position, thus no longer ensuring proper oven fluid drainage.	

Display	Description	Effect	Troubleshooting
AS - STATIC OVEN ALARM			
AS01	Bottom thermostat safety alarm	The static oven stops all operating cycles and blocks any display screen configuration	Contact the Customer Assistance Service
AS02	Ceiling thermostat safety alarm		
AS03	Oven dektop communications alarm		

Display	Description	Effect	Troubleshooting
AD - VIDEO BOARD PE1705 ALARM			
AD01	EEPROM 12C Alarm	The static oven stops all operating cycles and blocks any display screen configuration	Contact the Customer Assistance Service
AD02	12C Capacitive touchscreen alarm		
AD03	SPI screen communication alarm		
AD04	Communications failure alarm		

Display	Description	Effect	Troubleshooting
WD - VIDEO BOARD PE1705 WARNING			
WPURE	Number of residual litres supplied by Unox.Pure filter at zero	The WPURE message appears when the oven detects UNOX. PURE filter depletion	Contact the Customer Assistance Service
WD10	Error in EEPROM CRC for parameters that can be used for default or recipes	The oven may show anomalies during setting.	

Display	Description	Effect	Troubleshooting
AC - HOOD ALARM			
AC01	Communications failure alarm	Motor and smoke hood disengaged	Contact the Customer Assistance Service
AC10	Incorrect CRC alarm in EEPROM for essential parameters	Motor and smoke hood disengaged	

Display	Description	Effect	Troubleshooting
WC - HOOD WARNING			
WC01	Smoke detector failure	Smoke hood solenoid valve does not open when a smoke temperature probe is missing	Contact the Customer Assistance Service
WC02	Error of temperature board	The hood continues to run	
WC03	Smoke detector 2 failure	One of the two smoke hoods fails to engage.	
WC04	Delta T cooling between probes too low	Little or no smoke evacuation in the steam condenser	
WC10	Error in EEPROM CRC for parameters that can be used as default values	The hood continues to run (but with several limits based on the proper parameter)	

Display	Description	Effect	Troubleshooting
AL - PROVER ALARM			
AL01	Cavity probe alarm	The prover stops any operating cycle and stops any successive display screen settings	Contact the Customer Assistance Service
AL02	Communications failure alarm		
AL10	Incorrect CRC alarm in EEPROM for essential parameters		

Display	Description	Effect	Troubleshooting
WL - PROVER WARNING			
WL01	Error humidity probe	The prover continues to run but the automatic humidity regulation feature cannot be engaged	Contact the Customer Assistance Service
WL02	Error of temperature board	The prover continues to run	
WL03	Error of resistor compartment probe		
WL10	Error in EEPROM CRC for parameters that can be used as default values		

Display	Description	Effect	Troubleshooting
AM - TEMPERATURE MAINTAINER ALARM			
AM01	Cavity probe alarm	The temperature maintainer stops all operating cycles and blocks any successive display screen configuration ì	Contact the Customer Assistance Service
AM02	Communications failure alarm		
AM03	Safety thermostat alarm		
AM10	Incorrect CRC alarm in EEPROM for essential parameters		

Display	Description	Effect	Troubleshooting
WM - TEMPERATURE MAINTAINER WARNING			
WM01	Error with motor tachometer	The maintainer continues to run	Contact the Customer Assistance Service
WM02	Error of temperature board		
WM03	Error core probe	The maintainer continues to run but core probe processes cannot be activated.	
WM10	Error in EEPROM CRC for parameters that can be used as default values	The maintainer continues to run	

Display	Description	Effect	Troubleshooting
AO - REVERSE OSMOSIS ALARM			
AO01	Pressure gauge alarm: excessive pressure	Reverse osmosis stops all water treatment cycles	Contact the Customer Assistance Service
AO02	Low pressure alarm		
AO03	Communications failure alarm		

Display	Description	Effect	Troubleshooting
WO - REVERSE OSMOSIS WARNING			
WO01	Osmosis filter to be replaced	Osmosis is active	Contact the Customer Assistance Service
WO02	Intake filters obstructed		
WO03	NTC temperature above threshold		

Display	Description	Effect	Troubleshooting
AA - BLAST CHILLER ALARM			
AA01	Cavity probe alarm	The blast chiller stops all operating cycles and blocks any successive display screen configuration	Contact the Customer Assistance Service
AA02	Safety pressure gauge alarm		
AA03	Communications failure alarm		
AA10	Incorrect CRC alarm in EEPROM for essential parameters		

Display	Description	Effect	Troubleshooting
WA - BLAST CHILLER WARNING			
WA01	Error of temperature board	The blast chiller continues to run	Contact the Customer Assistance Service
WA02	Dirty filter		
WA03	Core probe error	The blast chiller continues to run but core probe processes cannot be activated.	
WA10	Error in EEPROM CRC for parameters that can be used as default values	The blast chiller continues to run	

Routine maintenance

Any routine maintenance procedure must be performed:
- after disconnecting the appliance from the power, water and gas supplies(ONLY FOR GAS OVENS**);**
- after having put on the proper personal protection equipment (i.e. gloves, etc...).

Clean the oven cavity daily to maintain proper levels of hygiene and to keep the stainless steel inside the oven cavity from getting ruined or corroding. Clean the oven daily even if the appliance is used exclusively with humid heat (steam).

When cleaning any component or accessory NEVER use:
- abrasive or powder detergents;
- aggressive or corrosive detergents (i.e. hydrochloric/muriatic or solfuric acid). Caution! Never use these substances also when cleaning the appliance substructure and floors;
- abrasive or sharp tools (i.e. abrasive sponges, scrapers, steel bristled brushes, etc...);
- high pressure cleaners with hot water sprays or high pressure steam jets.

External steel structures, oven cavity seal, core probe

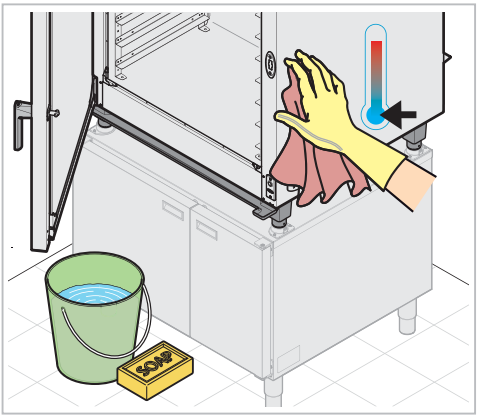

Wait for the surfaces to cool off.
Use only a soft cleaning cloth dampened with a little soap and water. Rinse and dry completely.
In alternative, only use detergents recommended by UNOX; other products may cause damage thereby invalidating the guarantee. Read the instructions provided by the detergent producer for their use.

Plastic surfaces and control panels

Use only a very soft cleaning cloth and a spare amount of detergent for cleaning delicate surfaces.

Internal part of the oven cavity

Failure to clean the oven cavity daily as hereafter described can make the accumulated fatty substances or food residues inside the cavity catch fire - danger of fire!

CLEANING WITH ROTOR.KLEAN®

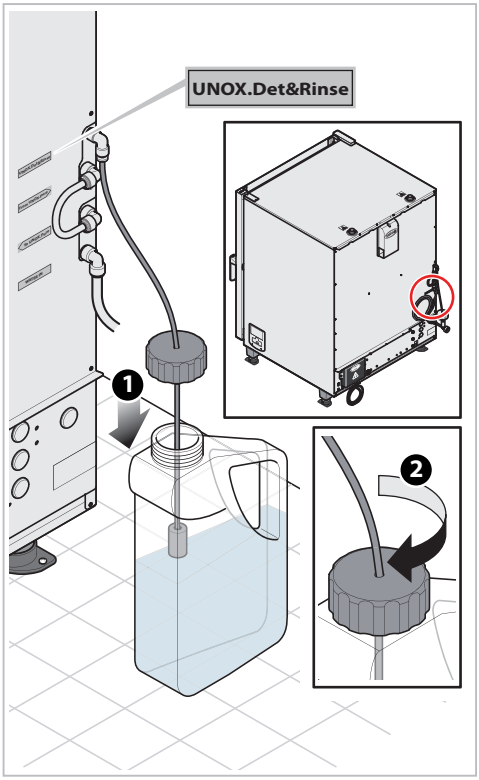

The ovens come equipped with one/two impeller(s) for cleaning the oven cavity.

Follow the procedure below for correct cleaning:

1) make sure that the detergent tank is not empty and is properly fastened to the ring nut of the supply tube.
We recommend using only UNOX.Det&Rinse cleaner by UNOX.
UNOX.Det&Rinse is the UNOX solution that offers both detergent and rinse aid in a single product, otherwise sold separately. The working principle of UNOX. Det&Rinse combines the degreasing action of detergents and the power of rinse aid to obtain the best results during oven washing and rinsing.

2) only for free-standing trolley ovens:
load the trolley into the cavity and lock it in place with the front wheel brakes.
3) Make sure that the door is completely closed and that the drain pipe is free of obstructions or caps.

Do not open the oven door during cleaning to avoid risks of injuries caused by fan movement, hot steam and aggressive action of chemical detergents used.

4) See chapter. ***"WASHING (washing programmes) AND PUMP LOADING (loading detergents)" at page 65*** and run the programme best suited to your needs.

REMOVING THE IMPELLER

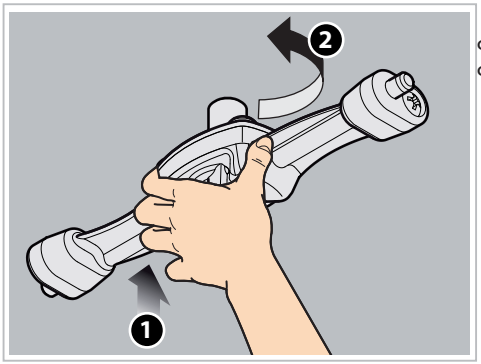

The impeller can be removed to make cleaning the oven cavity easier. Do this by pushing upward and unscrewing it counter-clockwise.
Clean with soapy water or descaler by following the instructions provided by the detergent manufacturer.
Replace after cleaning by performing the steps in reverse order.

WASHING BY HAND

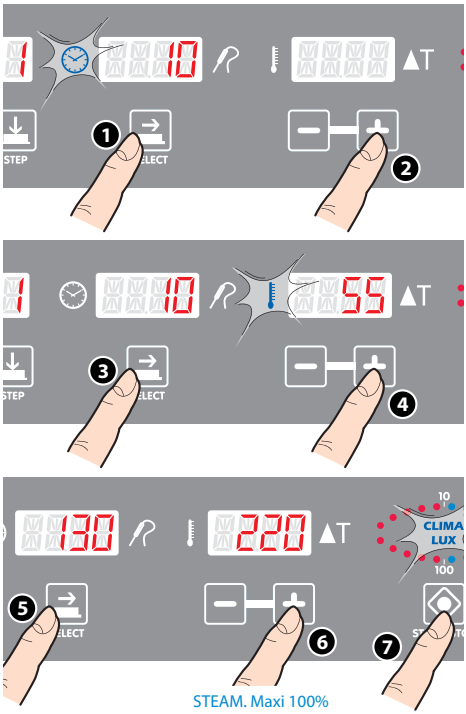

Follow the procedure below for cleaning the oven cavity:

- switch on the oven and set the temperature to 55°C and steam (STEAM.Maxi) to 100%;
- run the oven for 10 minutes;
- wait for the surfaces to cool off and clean with a soft cleaning cloth;
- rinse completely to remove all residues.

Remove the side grill holder to make cleaning easier as shown in the figure.

Clean the grill holders with soapy water or specific cleaners; **do not clean inside the dishwasher**.

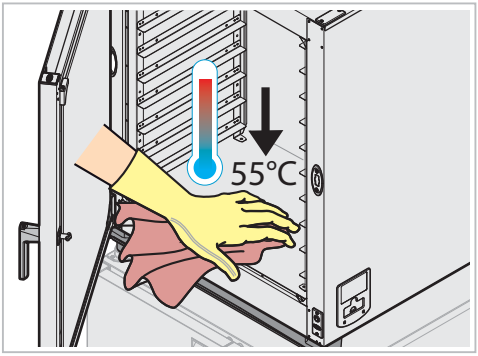

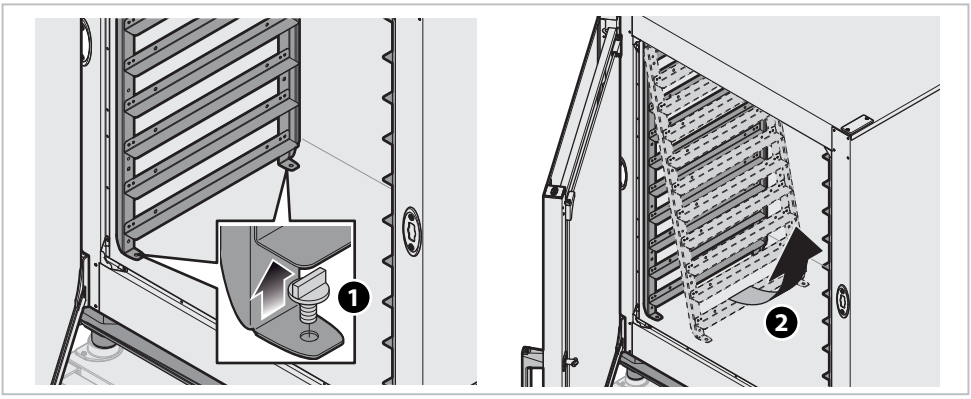

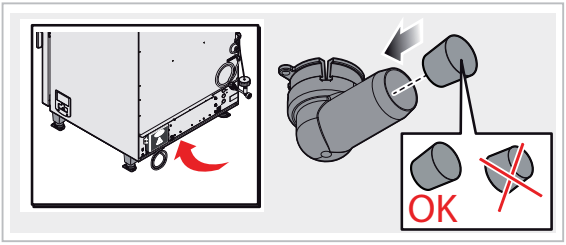

If the appliance is not permanently connected to a drainage system, the conical plug that seals the drain pipe must be removed before starting any washing cycles.
Replace the plug after this procedure.

Inside and outside oven door window glass

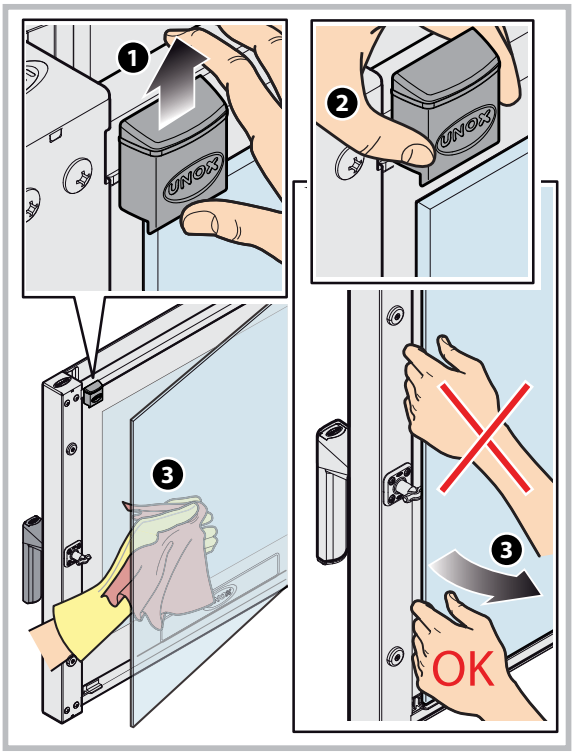

Wait for the windows to cool off.
Use only a soft cleaning cloth dampened with a little soap and water or specific glass cleaners.
Rinse and dry completely.
If more thorough cleaning is necessary, the inside window can be opened by following the indications shown in the figure.

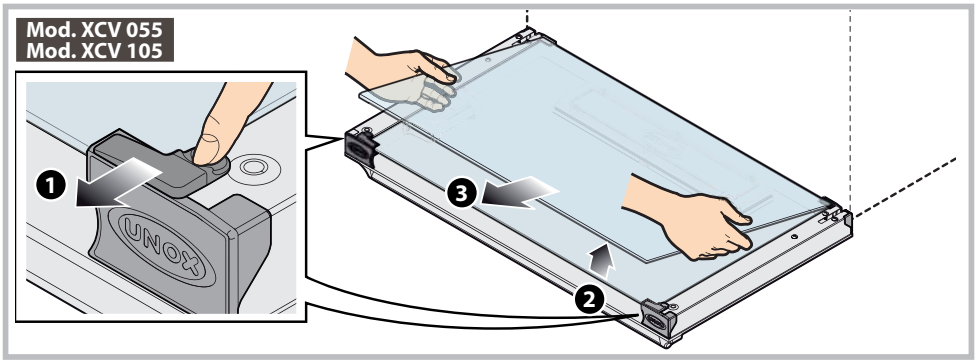

only for gas ovens

Appliances that evacuate exhaust gas through a flue must have qualified installer inspect it periodically in compliance with the laws in force in the country of installation. Request written documentation of the inspection.

Inactivity

Follow the precautions below during inactivity:

- disconnect the power, water and gas supplies to the appliance (ONLY FOR GAS OVENS);
- we recommend rubbing a soft cloth lightly doused with mineral oil on all stainless steel surfaces;
- keep the appliance door slightly ajar.

At first reuse:

- clean the appliance and its accessories thoroughly (see chapter ***"Routine maintenance"*** at page ***72***);
- restore the power, water and gas supplies to the appliance (ONLY FOR GAS OVENS);
- inspect the appliance before using it;
- switch on the appliance at minimum temperature for 50 minutes without any food inside of it.

It is best to have an authorized customer assistance service perform maintenance and inspection on the appliance at least once a year to ensure top working and safety conditions.

Disposal

In pursuit of article (No.). 13 of law 25 July 2005, No. 151 "Implementation of the Directives 2002/95/EC, 2002/96/EC and 2003/108/EC.

The product must undergo separate collection processes and cannot be disposed of as general waste when reaching end of life; keep in mind that illegal or incorrect product disposal incurs penalties as put forth by the current laws in force.
All appliances are made with recyclable metals (stainless steel, iron, aluminium, galvanized steel, copper, etc..) for more than 90% of overall weight: disposal of the product at the end of its life must be performed by electronic and electrical waste recycling centres, or the appliance must be returned to the dealer when buying a new equivalent product, on a one to one basis.
Render the appliance for disposal useless by removing the power cable and any compartment or cavity closure latch (where present) to avoid possible entrapment of persons.
Contact the local waste disposal centre for additional information.

After-sales assistance

In case of any malfunctions, disconnect the appliance from its power and water supply. Consult the solutions proposed in the ***"Table F"***.

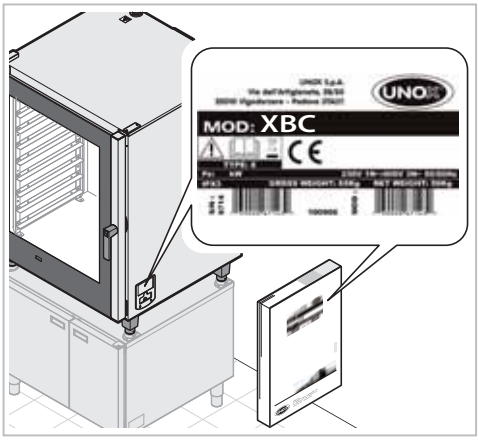

If the solution is not listed in the table, contact a UNOX authorized technical customer service. Provide the following information:

- the date of purchase;
- the appliance data on the serial plate;
- any alarm messages shown on the display screen (see chapter ***"Oven-user interface"*** at page ***67***).

Manufacturer's information:
UNOX S.p.A.
via dell'Artigianato, 28/30
35010 Vigodarzere (PD) Italy
Tel +39 049 8657511 - Fax +39 049 57555

Table F

Malfunction	Possible cause	Possible solution	Problem solution
The oven is completely switched off.	- No mains power. - Appliance out of order.	Make sure the appliance is connected to the electricity mains.	Contact the Customer Assistance Service.
No steam is produced inside the oven cavity.	- Water inlet closed. - Appliance plumbed into the water mains or the tank incorrectly. - No water in the tank (if water is taken from the tank). - Water supply filter clogged with impurities.	- Open water inlet. - Make sure the appliance is plumbed into the water mains or the tank correctly. - Fill the tank with water. - Clean the filter.	Contact the Customer Assistance Service.
After the time has been set and the START / STOP button pressed, the oven does not start.	Door open or not shut properly.	Make sure the door is shut.	Contact the Customer Assistance Service.
Water escapes from the seal while the door is shut.	- Seal is filthy. - Seal is damaged. - The handle mechanism is loose.	- Clean the seal using a damp cloth. - Contact a specialised technician to request the necessary repair work.	Contact the Customer Assistance Service.

Certification

EU declaration of conformity for electrical appliances

Manufacturer: UNOX S.p.A.
Address: Via Dell'Artigianato, 28/30 - 1 - 35010 - Vigodarzere, Padua, Italy

Declares, under its own responsibility, that the product
ChefTop ™ e BakerTop™ – Serie 5E

is compliant to the Machine Directive 2006/42/EC through the following standards:

EN 60335-2-42: 2003 + A1: 2008
EN 60335-1: 2002 + A1: 2004 + A11: 2004 + A2: 2006 + A12: 2006 + A13: 2008
EN 62233: 2008

and to the Electromagnetic Compatibility Directive 2004/108/EC through the following standards:

EN 55014-1: 2006 + A1: 2009
EN 55014-2: 1997 + A1: 2001 + A2: 2008
EN 61000-3-2: 2006 + A1: 2009 + A2: 2009
EN 61000-3-3: 2008
EN61000-3-11: 2000
EN61000-3-12: 2005
EN 61000-6-2: 2005
EN 61000-6-3: 2007

and Directive 2009/142/EC on gas appliances:

EN203-1
EN203-2-2

Guarantee

Installation of the UNOX product must be performed by an Authorized UNOX Assistance Service. The installation date and appliance model must be documented by the end purchaser, by means of written confirmation or an installation invoice issued by the dealer or the Authorised UNOX Customer Assistance Service, otherwise this guarantee will not be valid;
The UNOX guarantee covers all malfunctions objectively linked to production defects. The guarantee excludes damage due to transport, poor product storage or maintenance or incorrect product use. Also excluded is damage due to installation not conform to the technical specifications provided by Unox and linked to the environment of use, such as, for example, unclean and aggressive water supply, low quality gas supply, or electrical supply failing to respect nominal voltage and power ratings.
The guarantee also excludes any damage due to power surges or tampering by unauthorized or incompetent persons. The guarantee is also invalidated for damage to the appliance by lime scale deposits. In addition, the guarantee does not cover consumables, such as: seals, light bulbs, glass panels, decorative parts and parts consumed during use.
Guarantee rights will also be invalidated in the event of damage arising as a result of incorrect installation, or installation which has not been carried out by an Authorised Customer Assistance Service.

OVENS PLANET®

EMGA International B.V.

Groot Mijdrechtstraat 42
Postbus 32
3640 AA Mijdrecht
Tel. +31 (0)297-282341 - Fax. +31(0)297-287405
www.emga.com
info@emga.com

UNOX S.p.A.

Via dell'Artigianato, 28/30 - 35010 - Vigodarzere (PD) - Italy
Tel.: +39 049 86.57.511 - FAX: +39 049 86.57.555
info@unox.com

www.unox.com

BAKERTOP-CHEFTOP nl ma 2012